1st Choice of Position Holders

UNIQUE NOTES

MATHEMATICS 11

According to the new SLO-Based Curriculum of PECTAA

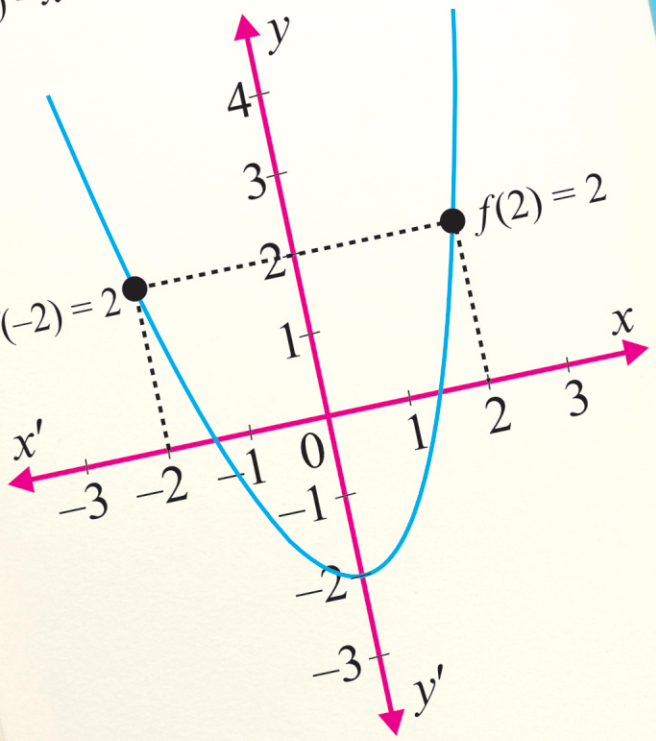

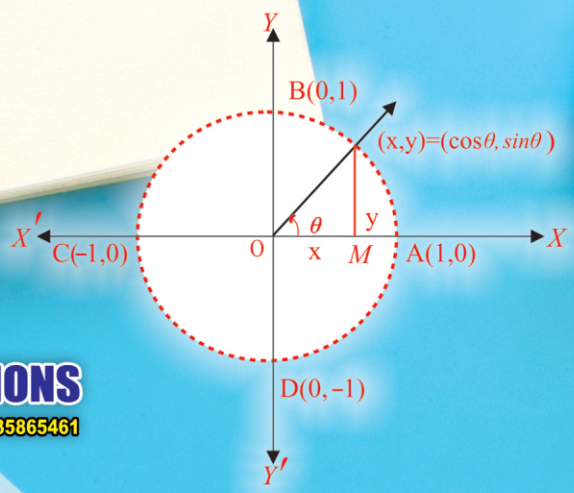

UNIQUE PUBLICATIONS
A Project of
UNIQUE GROUP OF INSTITUTIONS
106-A, New Muslim Town, Wahdat Road, Lahore. Tel: 92-42-35865461

TABLE OF CONTENTS

Unit 01 COMPLEX NUMBERS

- Complex Numbers
- Equality of Two Complex Numbers
- Complex Polynomials as a Product of Linear Factors
- Three Cube Roots of Unity
- Polar coordinates system
- Complex Numbers in the Real World

INTRODUCTION

Complex number are an extension of the real numbers designed to solve equations that have no solutions within the realm of real numbers. The history of mathematics shows that man has been developing and enlarging his concept of number according to the saying that "Necessity is the mother of invention". In the remote past they started with the set of counting numbers and invented, by stages, the negative numbers, rational numbers, irrational numbers etc. Since square of a positive as well as negative number is a positive number, the square root of a negative numbers does not exist in the realm of real numbers. Therefore, square roots of negative numbers were given no attention for centuries together. However, recently properties of numbers involving square roots of negative numbers have also been discussed in detail and such numbers have been found useful and have been applied in many branches of pure, applied, financial and computational mathematics.

Complex numbers

The number of the form $x+iy$, where $x,y\in\mathbb{R}$ and $i=\sqrt{-1}$, is called a complex number. x is called real part and y is called imaginary part of complex number.

For example $2+4i, 3+\sqrt{2}i, 8i$ etc. are complex numbers. The complex number $x+iy$, usually denotes the ordered pair (x,y) i.e., $z=(x,y)=x+iy$

Note:
Every real number is a complex number with 0 as its imaginary part.

Conjugate of a complex number

For a complex number $z=x+iy$, the complex number $\bar{z}=\overline{x+iy}=x-iy$, is called conjugate of z. Here z and $\bar{z}$ have same real part but their imaginary parts differ in sign, so z and $\bar{z}$ are called conjugate of each other. Thus $5+4i$ and $5-4i$ are conjugate complex numbers.

Note: If $z=\bar{z}$, then z is called self-conjugate.
$\because$ for $a\in\mathbb{R}, \bar{a}=a$
$\Rightarrow$ every real number is self-conjugate.

Powers of *i*

$i^2=-1 \because i=\sqrt{-1}$

$i^3=i^2\cdot i=(-1)\cdot i=-i$

$i^4=(i^2)^2=(-1)^2=1$

$i^5=(i^2)^2\cdot i=(-1)^2\cdot i=1\cdot i=i$

$i^6=(i^2)^3=(-1)^3=-1$

$i^7=(i^2)^3\cdot i=(-1)^3\cdot i=-1\cdot i=-i$

$i^8=(i^2)^4=(-1)^4=1$

and so on. Powers of i should be expressed in terms of powers of i^2.

Operations on Complex Numbers

If $a,b,c,d,k\in\mathbb{R}$, then

(i) Addition:

$(a+ib)+(c+id)=(a+c)+i(b+d)$

(ii) Scalar multiplication: $k(a+ib)=ka+ikb$

(iii) Subtraction: $(a+ib)-(c+id)$

$=a+ib-c-id$

$=(a-c)+i(b-d)$

(iv) Multiplication:

$(a+ib)(c+id)$

$=ac+iad+ibc+i^2bd$

$=ac+iad+ibc+(-1)bd$

$=(ac-bd)+i(ad+bc)$

(v) Division: $\frac{a+ib}{c+id}=\frac{a+ib}{c+id}\times\frac{c-id}{c-id}$

$=\frac{ac-iad+ibc-i^2bd}{c^2-(id)^2}$

$=\frac{ac-iad+ibc-(-1)bd}{c^2-(-1)d^2}$

$=\frac{ac-iad+ibc+bd}{c^2+d^2}$

$=\frac{(ac+bd)+i(bc-ad)}{c^2+d^2}$

$=\frac{ac+bd}{c^2+d^2}+i\frac{bc-ad}{c^2+d^2}$

Complex numbers as ordered pairs of real numbers

We can define complex numbers also by using ordered pairs.

Let C be the set of ordered pairs belonging to $\mathbb{R}\times\mathbb{R}$, which are subject to the following properties.

(i) $(a,b)=(c,d)\Leftrightarrow a=c\wedge b=d$

(ii) $(a,b)+(c,d)=(a+c,b+d)$

(iii) $(a,b)(c,d)=(ac-bd,ad+bc)$

(iv) $(a,b)-(c,d)=(a-c,b-d)$

(v) $\frac{(a,b)}{(c,d)}=\left(\frac{ac+bd}{c^2+d^2},\frac{bc-ad}{c^2+d^2}\right)$

(vi) $k(a,b)=(ka,kb)$

Example 1: Find the sum, difference and product of the complex numbers (8,9) and (5, –6). **11301001**

Solution:

Sum $=(8+5,9-6)=(13,3)$

Difference $=(8-5,9-(-6))=(3,15)$

Product $=[8\cdot5-(9)(-6),8(-6)+9\cdot5]$

$=(40+54,-48+45)$

$=(94,-3)$

Properties of the Fundamental Operations on Complex Numbers

It can be easily verified that the set C satisfies all the field axioms i.e., it possesses the properties of real numbers.

(i) The additive identity in C is $(0,0)$.

(ii) Every complex number (a,b) has the additive inverse $(-a,-b)$ i.e.,

$(a,b)+(-a,-b)=(0,0)$

(iii) The multiplicative identify is $(1,0)$ i.e.,

$(a,b)\cdot(1,0)=(a\cdot1-b\cdot0,b\cdot1+a\cdot0)=(a,b)$

$=(1,0)\cdot(a,b)$

(iv) Every non-zero complex number {i.e., number not equal to $(0,0)$} has a multiplicative inverse.

The multiplicative inverse of (a,b) is

$\left(\frac{a}{a^2+b^2},\frac{-b}{a^2+b^2}\right)$

$\because(a,b)\left(\frac{a}{a^2+b^2},\frac{-b}{a^2+b^2}\right)=$

$(1,0)$ the identity element.

$=\left(\frac{a}{a^2+b^2},\frac{-b}{a^2+b^2}\right)(a,b)$

(v) $(a,b)\left[(c,d)\pm(e,f)\right]=(a,b)(c,d)\pm(a,b)(e,f)$

> **Note:**
> The set C of complex number does not satisfy the order axioms. In fact, there is no sense in saying that one complex number is greater or less than the other.

Example 2: If $z_1=(4,2)$ and $z_2=(3,-1)$, then find $\frac{z_1}{z_2}$. **11301002**

Solution: Given $z_1=(4,2), z_2=(3,-1)$

Now, $\frac{z_1}{z_2}=\frac{(4,2)}{(3,-1)}=\frac{4+2i}{3-i}$

Multiply the numerator and denominator by the complex conjugate of $z_2=3-i$.

$$\begin{aligned}\frac{z_1}{z_2}&=\frac{4+2i}{3-i}\\&=\frac{4+2i}{3-i}\times\frac{3+i}{3+i}\\&=\frac{(4)(3)+(4)(i)+(2i)(3)+(2i)(i)}{(3)^2-(i)^2}\\&=\frac{12+4i+6i+2i^2}{9-i^2}\\&=\frac{12+10i-2}{9-(-1)}\quad\because i^2=-1\\&=\frac{10+10i}{10}\\&=1+i\end{aligned}$$

Thus, $\frac{z_1}{z_2}=1+i$

Argand diagram:

There is one to one correspondence between the set of complex numbers and the set of points in plane. i.e. to each complex number there is and ordered pair in the plane and vice versa. In the view of this correspondence *xy*-plane is called the complex plane. The *x*-axis is called real axis, the *y*-axis is called the imaginary axis. The coordinate plane itself is called the complex plane or *z*-plane. The figure representing one or more complex numbers on the complex plane is called Argand diagram. In an argand diagram the complex number $x+iy$ is uniquely expressed by the ordered pair (x,y).

Modulus of Complex number:

For a complex number $z=x+iy$, the real number $\sqrt{x^2+y^2}$ is called modulus of the complex number z and we write $|z|=\sqrt{x^2+y^2}$. Graphically it represents the distance of the point representing the complex number from origin as shown in the figure.

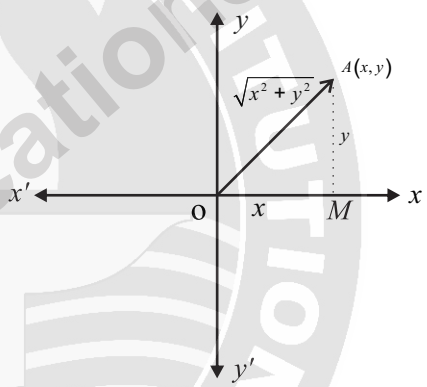

Example 3: If $z=\frac{(1+2i)^2}{2-i}$ then evaluate $|\bar{z}|$. **11301003**

Solution:

$$\begin{aligned}z&=\frac{(1+2i)^2}{2-i}\\&=\frac{1+4i+4i^2}{2-i}\\&=\frac{1+4i+4(-1)}{2-i}\\&=\frac{1+4i-4}{2-i}\\&=\frac{-3+4i}{2-i}\times\frac{2+i}{2+i}\end{aligned}$$

$$= \frac{-6-3i+8i+4i^2}{2^2-i^2}$$
$$= \frac{-6+5i-4}{4-(-1)}$$
$$= \frac{-10+5i}{5}$$
$$\Rightarrow z = -2+i$$

Taking conjugate

$$\bar{z} = \overline{-2+i} = -2-i$$
$$|\bar{z}| = |-2-i|$$
$$|\bar{z}| = \sqrt{(-2)^2+(-1)^2}$$
$$|\bar{z}| = \sqrt{4+1}$$
$$\Rightarrow |\bar{z}| = \sqrt{5}$$

EXERCISE 1.1

Q.1 Find the multiplicative inverse of each of the following complex numbers. **11301004**

(i) $(-4,7)$

Solution:

If $z=(a,b)$ then:

$$z^{-1} = \left(\frac{a}{a^2+b^2}, \frac{-b}{a^2+b^2}\right)$$

Let $z=(-4,7)$, then

$$z^{-1} = \left(\frac{-4}{(-4)^2+7^2}, \frac{-7}{(-4)^2+7^2}\right)$$
$$z^{-1} = \left(\frac{-4}{16+49}, \frac{-7}{16+49}\right)$$
$$z^{-1} = \left(\frac{-4}{65}, \frac{-7}{65}\right)$$

(ii) $\left(\sqrt{2},-\sqrt{5}\right)$

Solution:

If $z=(a,b)$ then:

$$z^{-1} = \left(\frac{a}{a^2+b^2}, \frac{-b}{a^2+b^2}\right)$$

Let

$z=\left(\sqrt{2},-\sqrt{5}\right)$, then

$$z^{-1} = \left(\frac{\sqrt{2}}{\left(\sqrt{2}\right)^2+\left(-\sqrt{5}\right)^2}, \frac{-\left(-\sqrt{5}\right)}{\left(\sqrt{2}\right)^2+\left(-\sqrt{5}\right)^2}\right)$$
$$z^{-1} = \left(\frac{\sqrt{2}}{2+5}, \frac{\sqrt{5}}{2+5}\right)$$
$$z^{-1} = \left(\frac{\sqrt{2}}{7}, \frac{\sqrt{5}}{7}\right)$$

(iii) $(1,0)$

Solution:

If $z=(a,b)$ then

$$z^{-1} = \left(\frac{a}{a^2+b^2}, \frac{-b}{a^2+b^2}\right)$$

Let $z=(1,0)$, then

$$z^{-1} = \left(\frac{1}{(1)^2+(0)^2}, \frac{0}{(1)^2+(0)^2}\right)$$
$$z^{-1} = \left(\frac{1}{1}, \frac{0}{1}\right)$$
$$z^{-1} = (1,0)$$

Q.2 Separate into real and imaginary parts (write as a simple complex number). **11301005**

(i) $\frac{2-7i}{4+5i}$

Solution:

$$\frac{2-7i}{4+5i} = \frac{2-7i}{4+5i} \times \frac{4-5i}{4-5i}$$
$$= \frac{8-10i-28i+35i^2}{4^2-(5i)^2}$$
$$= \frac{8-38i+35(-1)}{16-25i^2}$$
$$= \frac{8-38i-35}{16-25(-1)}$$

$$= \frac{-27-38i}{16+25}$$
$$= \frac{-27-38i}{41}$$
$$= -\frac{27}{41} - \frac{38i}{41}$$

$\Rightarrow$ Real part $= -\frac{27}{41}$

imaginary part $= -\frac{38}{41}$

(ii) $\frac{(-2+3i)^2}{1+i}$

Solution:

$$\frac{(-2+3i)^2}{1+i} = \frac{4-12i+9i^2}{1+i}$$
$$= \frac{4-12i+9(-1)}{1+i}$$
$$= \frac{4-12i-9}{1+i}$$
$$= \frac{-5-12i}{1+i}$$
$$= \frac{-5-12i}{1+i} \times \frac{1-i}{1-i}$$
$$= \frac{-5+5i-12i+12i^2}{(1)^2-i^2}$$
$$= \frac{-5-7i+12(-1)}{1-(-1)}$$
$$= \frac{-5-7i-12}{1+1}$$
$$= \frac{-17-7i}{2}$$
$$= -\frac{17}{2} - \frac{7i}{2}$$

$\Rightarrow$ Real part $= -\frac{17}{2}$

imaginary part $= -\frac{7}{2}$

(iii) $\frac{i}{1+i}$

Solution:

$$\frac{i}{1+i} = \frac{i}{1+i} \times \frac{1-i}{1-i}$$
$$= \frac{i-i^2}{1^2-i^2}$$
$$= \frac{i-(-1)}{1-(-1)}$$
$$= \frac{i+1}{1+1}$$
$$= \frac{1+i}{2}$$
$$= \frac{1}{2} + \frac{1}{2}i$$

So, Real part $= \frac{1}{2}$

imaginary part $= \frac{1}{2}$

(iv) $\frac{(4+3i)^2}{4-3i}$

Solution:

$$\frac{(4+3i)^2}{4-3i} = \frac{16+24i+9i^2}{4-3i}$$
$$= \frac{16+24i+9(-1)}{4-3i}$$
$$= \frac{16+24i-9}{4-3i}$$
$$= \frac{7+24i}{4-3i}$$
$$= \frac{7+24i}{4-3i} \times \frac{4+3i}{4+3i}$$
$$= \frac{28+21i+96i+72i^2}{(4)^2-(3i)^2}$$
$$= \frac{28+117i+72(-1)}{16-9(-1)}$$

$$= \frac{28+117i-72}{16+9}$$
$$= \frac{-44+117i}{25}$$
$$= \frac{-44}{25}+\frac{117i}{25}$$

So, Real part $= -\frac{44}{25}$

imaginary part $= \frac{117}{25}$

Q.3 Prove that $\overline{z} = z$ iff z is real. **11301006**

Solution:

Let $z = x+iy$ ...(i)

Then $\overline{z} = x-iy$ ...(ii)

Where $x, y \in R$

Suppose that: $\overline{z} = z$

$\Rightarrow x-iy = x+iy$

$\Rightarrow x-iy-x-iy = 0$

$\Rightarrow -2iy = 0$

$\Rightarrow y = 0 \qquad \because -2 \neq 0, i \neq 0$

Putting $y = 0$ in (i), we get

$z = x+i.0 = x \in R$ i.e. z is real

Conversely suppose that z is real, then imaginary part of $z = 0 \Rightarrow y = 0$

Putting $y = 0$ in (i) and (ii), we get

$z = x+i0 = x+0 = x$

$\overline{z} = x-i0 = x-0 = x$

$\Rightarrow z = \overline{z}$

Thus $\overline{z} = z$ iff z is real.

Q.4 For $z \in C$, show that: **11301007**

(i) $\frac{z+\overline{z}}{2} = \text{Re}(z)$

Solution:

$\because z \in C$

$\therefore$ Let $z = x+iy$ then

$\overline{z} = x-iy$, where $x, y \in R$ and $i = \sqrt{-1}$

Now L.H.S.

$$= \frac{z+\overline{z}}{2}$$
$$= \frac{x+iy+(x-iy)}{2}$$
$$= \frac{x+iy+x-iy}{2}$$
$$= \frac{2x}{2}$$
$$= x = \text{Re}(z) = R.H.S$$

Hence proved.

(ii) $\frac{z-\overline{z}}{2i} = \text{Im}(z)$

Solution:

$\because z \in C$

$\therefore$ Let $z = x+iy$ then $\overline{z} = x-iy$, where $x, y \in R$ and $i = \sqrt{-1}$

Now, L.H.S

$$= \frac{z-\overline{z}}{2i}$$
$$= \frac{x+iy-(x-iy)}{2i}$$
$$= \frac{x+iy-x+iy}{2i}$$
$$= \frac{2iy}{2i}$$
$$= y = \text{Im}(z) = R.H.S$$

Hence proved.

(iii) $|z|^2 = z.\overline{z}$

Solution:

$\because z \in C$

Let $z = x+iy$ then $\overline{z} = x-iy$, where $x, y \in R$ and $i = \sqrt{-1}$

Now R.H.S $= z.\overline{z} = (x+iy)(x-iy)$

$$= x^2-(iy)^2$$
$$= x^2-i^2y^2$$
$$= x^2-(-1)y^2$$
$$= x^2+y^2$$

$$=\left(\sqrt{x^2+y^2}\right)^2=|z|^2=\text{R.H.S}$$

Hence proved.

Q.5 If $z_1=2+i, z_2=3-2i, z_3=1+3i$ then express $\frac{\overline{z_1}\,\overline{z_3}}{z_2}$ in form of $a+ib$. **11301008**

Solution:

$$\frac{\overline{z_1}\,\overline{z_3}}{z_2}=\frac{\left(\overline{2+i}\right).\left(\overline{1+3i}\right)}{3-2i}$$

$$=\frac{(2-i)(1-3i)}{3-2i}$$

$$=\frac{2-6i-i+3i^2}{3-2i}$$

$$=\frac{2-7i+3(-1)}{3-2i}$$

$$=\frac{2-7i-3}{3-2i}$$

$$=\frac{-1-7i}{3-2i}$$

$$=\frac{-1-7i}{3-2i}\times\frac{3+2i}{3+2i}$$

$$=\frac{-3-2i-21i-14i^2}{(3)^2-(2i)^2}$$

$$=\frac{-3-23i-14(-1)}{9-4i^2}$$

$$=\frac{-3-23i+14}{9-4(-1)}$$

$$=\frac{11-23i}{9+4}$$

$$=\frac{11}{13}-\frac{23}{13}i$$

So, Real part $=\frac{11}{13}$

imaginary part $=-\frac{23}{13}$

Q.6 If $z_1=2+7i$ and $z_2=-5+3i$, then evaluate the following: **11301009**

(i) $|2z_1-4z_2|$

Solution:

$$|2z_1-4z_2|=|2(2+7i)-4(-5+3i)|$$

$$=|4+14i+20-12i|$$

$$=|24+2i|$$

$$=\sqrt{(24)^2+(2)^2}$$

$$=\sqrt{576+4}$$

$$=\sqrt{580}$$

$$=\sqrt{4\times145}$$

$$=2\sqrt{145}$$

(ii) $|3z_1+2\overline{z_1}|$

Solution:

$$|3z_1+2\overline{z_1}|=|3(2+7i)+2(\overline{2+7i})|$$

$$=|3(2+7i)+2(2-7i)|$$

$$=|6+21i+4-14i|$$

$$=|10+7i|$$

$$=\sqrt{(10)^2+(7)^2}$$

$$=\sqrt{100+49}$$

$$=\sqrt{149}$$

(iii) $|-7z_2+2\overline{z_2}|$

Solution:

$$|-7z_2+2\overline{z_2}|=|-7(-5+3i)+2(\overline{-5+3i})|$$

$$=|-7(-5+3i)+2(-5-3i)|$$

$$=|35-21i-10-6i|$$

$$=|25-27i|$$

$$= \sqrt{(25)^2 + (-27)^2}$$
$$= \sqrt{625 + 729}$$
$$= \sqrt{1354}$$

(iv) $\left|(z_1 + z_2)^3\right|$

Solution:

$$\left|(z_1 + z_2)^3\right| = \left|(2 + 7i - 5 + 3i)^3\right|$$
$$= \left|(-3 + 10i)^3\right|$$
$$= \left|(10i - 3)^3\right|$$
$$= \left|(10i)^3 - (3)^3 - 3(10i)(3)(10i - 3)\right|$$
$$= \left|1000i^3 - 27 - 90i(10i - 3)\right|$$
$$= \left|1000i^2 \cdot i - 27 - 900i^2 + 270i\right|$$
$$= \left|1000(-1).i - 27 - 900(-1) + 270i\right|$$
$$= \left|-1000i - 27 + 900 + 270i\right|$$
$$= \left|873 - 730i\right|$$
$$= \sqrt{(873)^2 + (-730)^2}$$
$$= \sqrt{762129 + 532900}$$
$$= \sqrt{1295029}$$
$$= 109\sqrt{109}$$

Q.7 Show that: $i^{n+1} + i^{n+2} + i^{n+3} + i^{n+4} = 0$ **for all** $n \in N$. **11301010**

Solution:

To show that:

$$i^{n+1} + i^{n+2} + i^{n+3} + i^{n+4} = 0$$

L.H.S:

$$= i^{n+1} + i^{n+2} + i^{n+3} + i^{n+4}$$
$$= i^n.i + i^n.i^2 + i^n.i^3 + i^n.i^4$$
$$= i^n.i + i^n.i^2 + i^n.i^2.i + i^n.(i^2)^2$$
$$= i^n.i + i^n.(-1) + i^n(-1).i + i^n.(-1)^2$$

Because $i^2 = -1$

$$= i^n.i - i^n - i^n.i + i^n = 0$$

=R.H.S

Hence proved.

Q.8 Find the least positive value of *n*, if: $\left(\frac{1+i}{1-i}\right)^{2n} = 1$ **11301011**

Solution:

Given that:

$$\left(\frac{1+i}{1-i}\right)^{2n} = 1$$
$$\left(\frac{1+i}{1-i} \times \frac{1+i}{1+i}\right)^{2n} = 1$$
$$\left[\frac{(1+i)^2}{1-i^2}\right]^{2n} = 1$$
$$\left[\frac{1+i^2+2i}{1-(-1)}\right]^{2n} = 1$$
$$\left[\frac{1+(-1)+2i}{1+1}\right]^{2n} = 1$$
$$\left[\frac{1-1+2i}{2}\right]^{2n} = 1$$
$$\left[\frac{2i}{2}\right]^{2n} = 1$$
$$[i]^{2n} = 1$$
$$i^{2n} = 1$$
$$i^{2n} = i^4$$

by comparing, we have

$$2n = 4$$
$$n = \frac{4}{2}$$
$$n = 2$$

So, the least positive value of n is 2.

Q.9 Show that, the value of i^n for $n \in N$ and $n > 4$ is i^r ,where r is the remainder when n is divided by 4. **11301012**

Solution:

Let $n = 4k + r$,where k is positive integer and r is the remainder when n is divisible by 4.

Now,

$$i^n = i^{4k+r}$$
$$= i^{4k}.i^r$$
$$= \left(i^2\right)^{2k}.i^r$$
$$= (-1)^{2k}.i^r$$
$$= 1.i^r \qquad \because 2k \text{ is even.}$$
$$i^n = i^r$$

Hence proved.

Equality of two complex numbers

The two complex numbers $z_1 = a + ib$ and $z_2 = c + id$ are said to be equal iff their real and imaginary parts are equal. i.e. $a + ib = c + id \Leftrightarrow a = c$ and $b = d$.

Example 4: If $(3+2i)(x+iy) = 5+12i$, where $x, y \in R$, then find the values of x and y. **11301013**

Solution:

Given that:

$$(3+2i)(x+iy) = 5+12i$$
$$\Rightarrow 3x + 3iy + 2ix + 2yi^2 = 5 + 12i$$
$$\Rightarrow (3x - 2y) + (2x + 3y)i = 5 + 12i$$

Comparing real and imaginary parts, we have

$$3x - 2y = 5 \qquad \ldots(\text{i})$$
$$2x + 3y = 12 \qquad \ldots(\text{ii})$$

Multiplying equation (i) by 3 and equation (ii) by 2, we have

$$9x - 6y = 15$$
$$4x + 6y = 24$$

Add the equations, we have

$$9x - 6y + 4x + 6y = 15 + 24$$
$$13x = 39$$
$$x = 3$$

Substitute $x = 3$ in equation (i), we have

$$9(3) - 6y = 15$$
$$-6y = -12$$
$$y = 2$$

Thus, $x = 3, y = 2$

Square root of a complex number

The square root of a complex number is another complex number that, when squared, gives the original complex number.

Let $w = p + iq$ is the square root of the complex number $z = x + iy$, where $p, q, x, y \in R$ then $w = \sqrt{z}$

Squaring both sides, we get

$$w^2 = z$$
$$\Rightarrow (p + iq)^2 = x + iy$$
$$\Rightarrow p^2 + (iq)^2 + 2ipq = x + iy$$
$$\Rightarrow p^2 + i^2q^2 + 2ipq = x + iy$$
$$\Rightarrow p^2 + (-1)q^2 + 2ipq = x + iy$$
$$\Rightarrow p^2 - q^2 + 2ipq = x + iy$$

Comparing the real and imaginary parts, we get

$$p^2 - q^2 = x \quad \ldots(\text{i})$$
$$2pq = y \quad \ldots(\text{ii})$$
$$\because (a+b)^2 = (a-b)^2 + 4ab$$
$$\therefore \left(p^2 + q^2\right)^2 = \left(p^2 - q^2\right)^2 + 4p^2q^2$$
$$= \left(p^2 - q^2\right)^2 + 4p^2q^2$$
$$= \left(p^2 - q^2\right)^2 + (2pq)^2 = x^2 + y^2$$

[by using (i) and (ii)]

$$\Rightarrow p^2 + q^2 = \sqrt{x^2 + y^2} \quad \ldots(\text{iii})$$

Adding (i) and (iii), we get

$$p^2 - q^2 = x$$
$$p^2 + q^2 = \sqrt{x^2 + y^2}$$
$$2p^2 = x + \sqrt{x^2 + y^2}$$
$$p^2 = \frac{x + \sqrt{x^2 + y^2}}{2}$$
$$p^2 = \frac{\sqrt{x^2 + y^2} + x}{2}$$

Putting this value of p^2 in (iii), we get

$$\frac{\sqrt{x^2 + y^2} + x}{2} + q^2 = \sqrt{x^2 + y^2}$$
$$q^2 = \sqrt{x^2 + y^2} - \frac{\sqrt{x^2 + y^2} + x}{2}$$
$$q^2 = \frac{2\sqrt{x^2 + y^2} - \sqrt{x^2 + y^2} - x}{2}$$
$$q^2 = \frac{\sqrt{x^2 + y^2} - x}{2}$$

Thus, $p^2 = \frac{\sqrt{x^2 + y^2} + x}{2}$ and $q^2 = \frac{\sqrt{x^2 + y^2} - x}{2}$

$$\Rightarrow p = \pm\sqrt{\frac{\sqrt{x^2 + y^2} + x}{2}} = \pm\sqrt{\frac{|z| + x}{2}} \text{ and}$$
$$q = \pm\sqrt{\frac{\sqrt{x^2 + y^2} - x}{2}} = \pm\sqrt{\frac{|z| - x}{2}}$$

From eq. (ii), i.e. $2pq = y$, we have

(i) $y > 0$, if both p and q have same signs.

(ii) $y < 0$, if both p and q have opposite signs.

(iii) $y = 0$, if both p and q are zero.

Thus, $\sqrt{z} = \sqrt{x + iy} = w = p + iq$

$$= \pm\left(\sqrt{\frac{|z| + x}{2}} + i\frac{y}{|y|}\sqrt{\frac{|z| - x}{2}}\right)$$

Example 5: Find the square root of complex number $5 + 12i$ and also represent in the square roots on an Argand diagram. **11301014**

Solution: Let $x + yi = 5 + 12i$

$$\Rightarrow x = 5 \text{ and } y = 12 > 0$$
$$|z| = |5 + 12i|$$
$$|z| = \sqrt{5^2 + 12^2},$$
$$|z| = 13$$

Applying the square root formula for complex numbers, we get

$$\sqrt{5 + 12i} = \pm\left(\sqrt{\frac{13 + 5}{2}} + \frac{i12}{|12|}\sqrt{\frac{13 - 5}{2}}\right)$$
$$= \pm\left(\sqrt{9} + i\sqrt{4}\right)$$
$$= \pm(3 + 2i)$$

Thus, the square root of the complex number $5 + 12i$ are $3 + 2i$ and $-3 - 2i$ are shown in adjacent figure.

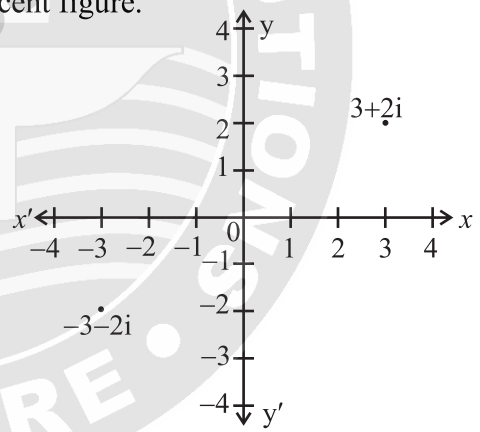

EXERCISE 1.2

Q.1 Find the value of x and y in each of the following: **11301015**

(i) $x + iy + 2 - 3i = i(5 - i)(3 + 4i)$

Solution:

Given that: $x + iy + 2 - 3i = i(5 - i)(3 + 4i)$

$$\Rightarrow x + 2 + iy - 3i = i(15 + 20i - 3i - 4i^2)$$
$$\Rightarrow (x + 2) + i(y - 3) = i\{15 + 17i - 4(-1)\}$$

$\Rightarrow (x+2)+i(y-3)=i(15+17i+4)$

$\Rightarrow (x+2)+i(y-3)=i(19+17i)$

$\Rightarrow (x+2)+i(y-3)=19i+17i^2$

$\Rightarrow (x+2)+i(y-3)=19i+17(-1)$

$\Rightarrow (x+2)+i(y-3)=-17+19i$

Comparing the real and imaginary parts, we get:

$x+2=-17 \quad \ldots(i)$

$y-3=19 \quad \ldots(ii)$

From eq. (i), we have

$x+2=-17$

$\Rightarrow x=-17-2$

$\Rightarrow x=-19$

Now, from eq. (ii), we have

$y-3=19$

$\Rightarrow y=19+3$

$\Rightarrow y=22$

Thus, $x=-19$ and $y=22$

(ii) $(x+iy)(1-i)=(2-3i)(-5+5i)\left(-\frac{3i}{5}\right)$

Solution:

Given that:

$(x+iy)(1-i)=(2-3i)(-5+5i)\left(-\frac{3i}{5}\right)$

$\Rightarrow x-ix+iy-i^2y=(-10+10i+15i-15i^2)\left(-\frac{3i}{5}\right)$

$\Rightarrow x-ix+iy-(-1)y=(-10+25i-15(-1))\left(-\frac{3i}{5}\right)$

$\Rightarrow x-ix+iy+y=(-10+25i+15)\left(-\frac{3i}{5}\right)$

$\Rightarrow x+y+iy-ix=(5+25i)\left(-\frac{3i}{5}\right)$

$\Rightarrow (x+y)+i(y-x)=5(1+5i)\left(\frac{-3i}{5}\right)$

$\Rightarrow (x+y)+i(y-x)=-3i-15i^2$

$\Rightarrow (x+y)+i(y-x)=-3i-15(-1)$

$\Rightarrow (x+y)+i(y-x)=15-3i$

Comparing the real and imaginary parts, we get:

$x+y=15 \ldots(i)$

$y-x=-3 \ldots(ii)$

Adding (i) and (ii), we get

$2y=12$

$\Rightarrow y=\frac{12}{2}$

$\Rightarrow y=6$

Putting $y=6$ in (i), we get

$x+6=15$

$\Rightarrow x=15-6$

$\Rightarrow x=9$

Thus, $x=9$ and $y=6$

(iii) $\frac{x}{2+i}+\frac{y}{3-i}=4+5i$

Solution:

Given that:

$\frac{x}{2+i}+\frac{y}{3-i}=4+5i$

$\Rightarrow \frac{x}{2+i}\times\frac{2-i}{2-i}+\frac{y}{3-i}\times\frac{3+i}{3+i}=4+5i$

$\Rightarrow \frac{x(2-i)}{2^2-i^2}+\frac{y(3+i)}{3^2-i^2}=4+5i$

$\Rightarrow \frac{2x-ix}{4-(-1)}+\frac{3y+iy}{9-(-1)}=4+5i$

$\Rightarrow \frac{2x-ix}{4+1}+\frac{3y+iy}{9+1}=4+5i$

$\Rightarrow \frac{2x-ix}{5}+\frac{3y+iy}{10}=4+5i$

$\Rightarrow \frac{4x-i2x+3y+iy}{10}=4+5i$

$\Rightarrow 4x-i2x+3y+iy=10(4+5i)$

$\Rightarrow 4x-i2x+3y+iy=40+50i$

$\Rightarrow (4x+3y)+iy-i2x=40+50i$

$\Rightarrow (4x+3y)+i(y-2x)=40+50i$

Comparing the real and imaginary parts, we get:

$$4x+3y=40...(\text{i})$$

$$y-2x=50...(\text{ii})$$

From (ii), we get $y=50+2x...(\text{iii})$

Using (iii) in (i), we get

$4x+3(50+2x)=40$

$\Rightarrow 4x+150+6x=40$

$\Rightarrow 4x+6x=40-150$

$\Rightarrow 10x=-110$

$\Rightarrow x=\dfrac{-110}{10}$

$\Rightarrow x=-11$

Putting $x=-11$ in (iii), we get

$y=50+2(-11)=50-22=28$

Thus, $x=-11$ and $y=28$

Q.2 If $z_1=-13+24i$ and $z_2=x+iy$, find the values of x and y such that $z_1-z_2=-27+15i$. **11301016**

Solution:

Given that:

$z_1=-13+24i$ and $z_2=x+iy$

$z_1-z_2=-27+15i$

$\Rightarrow(-13+24i)-(x+iy)=-27+15i$

$\Rightarrow -13+24i-x-iy=-27+15i$

$\Rightarrow -13-x+24i-iy=-27+15i$

$\Rightarrow(-13-x)+i(24-y)=-27+15i$

Comparing the real and imaginary parts, we get:

$-13-x=-27 \quad \ldots(\text{i})$

$24-y=15 \quad \ldots(\text{ii})$

From eq. (i), we have

$-13-x=-27$

$\Rightarrow -x=-27+13$

$\Rightarrow -x=-14$

$\Rightarrow x=14$

Now, from eq. (ii), we have

$24-y=15$

$\Rightarrow -y=15-24$

$\Rightarrow -y=-9$

$\Rightarrow y=9$

Thus, $x=14$ and $y=9$

Q.3 Find the real values of x and y if: **11301017**

(i) $(x+iy)^2=25+60i$

Solution:

Given that:

$(x+iy)^2=25+60i$

$\Rightarrow x+iy=\sqrt{25+60i} \quad ...(\text{i})$

Let $z=a+ib=25+60i$, then

$|z|=\sqrt{a^2+b^2}$

$=\sqrt{(25)^2+(60)^2}$

$=\sqrt{625+3600}$

$=\sqrt{4225}=65$

Now, $\sqrt{z}=\pm\left(\sqrt{\dfrac{|z|+a}{2}}+i\dfrac{b}{|b|}\sqrt{\dfrac{|z|-a}{2}}\right)$

$\sqrt{25+60i}=\pm\left(\sqrt{\dfrac{65+25}{2}}+i\dfrac{60}{|60|}\sqrt{\dfrac{65-25}{2}}\right)$

$=\pm\left(\sqrt{\dfrac{90}{2}}+i\dfrac{60}{60}\sqrt{\dfrac{40}{2}}\right)$

$=\pm\left(\sqrt{45}+i\sqrt{20}\right)$

$=\pm\left(3\sqrt{5}+i2\sqrt{5}\right)$

$=\pm3\sqrt{5}\pm i2\sqrt{5}$

$\therefore$ Equation (i) becomes

$x+iy=\pm3\sqrt{5}\pm i2\sqrt{5}$

By comparing, we have

$\Rightarrow x=\pm3\sqrt{5}, y=\pm2\sqrt{5}$

(ii) $(x+iy)^2 = 64+48i$

Solution:

Given that $(x+iy)^2 = 64+48i$

$\Rightarrow x+iy = \sqrt{64+48i}$ ...(i)

Let $z = a+ib = 64+48i$, then

$|z| = \sqrt{a^2+b^2}$

$|z| = \sqrt{(64)^2+(48)^2}$

$|z| = \sqrt{4096+2304}$

$|z| = \sqrt{6400} = 80$

Now, $\sqrt{z} = \pm\left(\sqrt{\frac{\sqrt{|z|+a}}{2}} + i\frac{b}{|b|}\sqrt{\frac{\sqrt{|z|-a}}{2}}\right)$

$$\sqrt{64+48i} = \pm\left(\sqrt{\frac{80+64}{2}} + i\frac{48}{|48|}\sqrt{\frac{80-64}{2}}\right)$$

$$= \pm\left(\sqrt{\frac{144}{2}} + i\frac{48}{48}\sqrt{\frac{16}{2}}\right)$$

$$= \pm\left(\sqrt{72} + i\sqrt{8}\right)$$

$$= \pm\left(6\sqrt{2} + i2\sqrt{2}\right)$$

$$= \pm 6\sqrt{2} \pm i2\sqrt{2}$$

$\therefore$ Equation (i) becomes

$x+iy = \pm 6\sqrt{2} \pm i2\sqrt{2}$

By comparing, we have

$\Rightarrow x = \pm 6\sqrt{2}, y = \pm 2\sqrt{2}$

(iii) $(x+iy)^2 = \frac{2i-3}{3+i}$

Solution:

Given that:

$$(x+iy)^2 = \frac{2i-3}{3+i}$$

$$(x+iy)^2 = \frac{2i-3}{3+i} \times \frac{3-i}{3-i}$$

$$(x+iy)^2 = \frac{6i-2i^2-9+3i}{3^2-i^2}$$

$$(x+iy)^2 = \frac{9i-2(-1)-9}{9-(-1)}$$

$$(x+iy)^2 = \frac{9i+2-9}{9+1}$$

$$(x+iy)^2 = \frac{-7+9i}{10}$$

$$(x+iy)^2 = \frac{-7}{10} + \frac{9}{10}i$$

$x+iy = \sqrt{-0.7+0.9i}$

$x+iy = \sqrt{-0.7+0.9i}$ ...(i)

Let $z = a+ib = -0.7+0.9i$ then

$|z| = \sqrt{a^2+b^2}$

$|z| = \sqrt{(-0.7)^2+(0.9)^2}$

$|z| = \sqrt{0.49+0.81}$

$|z| = \sqrt{1.3}$

$|z| = 1.1402$

$$\sqrt{z} = \pm\left(\sqrt{\frac{|z|+a}{2}} + \frac{ib}{|b|}\sqrt{\frac{|z|-a}{2}}\right)$$

$$= \pm\left(\sqrt{\frac{1.1402+(-0.7)}{2}} + \frac{i(0.9)}{|0.9|}\sqrt{\frac{1.1402-(-0.7)}{2}}\right)$$

$$= \pm\left(\sqrt{\frac{1.1402-0.7}{2}} + \frac{i(0.9)}{0.9}\sqrt{\frac{1.1402+0.7}{2}}\right)$$

$$\sqrt{0.7+0.9i} = \pm\left(\sqrt{\frac{0.4402}{2}} + i\sqrt{\frac{1.8402}{2}}\right)$$

$$\sqrt{0.7+0.9i} = \pm\left(\sqrt{0.2201} + i\sqrt{0.9201}\right)$$

$$\sqrt{0.7+0.9i} = \pm(0.469+0.959i)$$

$$\sqrt{0.7+0.9i} = \pm 0.469 \pm i0.959$$

Equation (i) become:

$x+iy = \pm 0.469 \pm i0.959$

$\Rightarrow x = \pm 0.469, y = \pm 0.959$

Q.4 If $z_1 = 2+3i$ and $z_2 = 1-\alpha$, find the value of α such that $\text{Im}(z_1 z_2) = 7$. 11301018

Solution:

Given that

$z_1 = 2+3i$ and $z_2 = 1-\alpha$

$\text{Im}(z_1 z_2) = 7 \ldots(\text{i})$

Putting value in equation, we have

$\Rightarrow \text{Im}[(2+3i)(1-\alpha)] = 7$

$\Rightarrow \text{Im}[2-2\alpha+3i-3\alpha i] = 7$

$\Rightarrow \text{Im}[(2-2\alpha)+i(3-3\alpha)] = 7$

$\Rightarrow 3-3\alpha = 7$

$\Rightarrow -3\alpha = 7-3$

$\Rightarrow -3\alpha = 4$

$\Rightarrow \alpha = \dfrac{4}{-3}$

$\Rightarrow \alpha = -\dfrac{4}{3}$

Q.5 If $z_1 = x+iy$ and $z_2 = a+ib$, find x, y, a and b such that $z_1 + z_2 = 10+4i$ and $z_1 - z_2 = 6+2i$. 11301019

Solution:

Given that:

$z_1 = x+iy$, $z_2 = a+ib$

$z_1 + z_2 = 10+4i \ldots(\text{i})$ and

$z_1 - z_2 = 6+2i \quad \ldots(\text{ii})$

Adding (i) and (ii), we get

$$\begin{aligned} z_1 + z_2 &= 10+4i \\ z_1 - z_2 &= 6+2i \\ \hline 2z_1 &= 16+6i \end{aligned}$$

$\Rightarrow z_1 = \dfrac{16+6i}{2}$

$\Rightarrow z_1 = \dfrac{2(8+3i)}{2}$

$\Rightarrow z_1 = 8+3i$

$\Rightarrow x+iy = 8+3i$

Comparing the real and imaginary parts, we get:

$x = 8, y = 3$

Subtracting (ii) and (i), we get

$$\begin{aligned} z_1 + z_2 &= 10+4i \\ -\ z_1 \mp z_2 &= \pm 6 \pm 2i \\ \hline 2z_2 &= 4+2i \end{aligned}$$

$\Rightarrow z_2 = \dfrac{4+2i}{2}$

$\Rightarrow z_2 = \dfrac{2(2+i)}{2}$

$\Rightarrow z_1 = 2+i$

$\Rightarrow a+ib = 2+1.i$

Comparing the real and imaginary parts, we get

$a = 2, b = 1$

Q.6 Show that $\forall z_1, z_2 \in C, \overline{z_1 \cdot z_2} = \overline{z_1} \cdot \overline{z_2}$. 11301020

Solution:

Let $z_1 = a+ib$ and $z_2 = c+id$

L.H.S $= \overline{z_1 \cdot z_2} = \overline{(a+ib)(c+id)}$

$= \overline{ac+iad+ibc+i^2bd}$

$= \overline{ac+iad+ibc+(-1)bd}$

$= \overline{ac+iad+ibc-bd}$

$= \overline{ac-bd+iad+ibc}$

$= \overline{(ac-bd)+i(ad+bc)}$

$= (ac-bd)-i(ad+bc) \ \ldots(\text{i})$

R.H.S $= \overline{z_1} \cdot \overline{z_2} = \overline{a+ib} \cdot \overline{c+id}$

$= (a-ib)(c-id)$

$= ac-iad-ibc+i^2bd$

$= ac-iad-ibc+(-1)bd$

$= ac-iad-ibc-bd$

$= (ac-bd)-i(ad+bc) \quad \ldots(\text{ii})$

Thus, from (i) and (ii), we get

$\overline{z_1 \cdot z_2} = \overline{z_1} \cdot \overline{z_2}$

Hence proved.

Q.7 Find the square root of the following complex numbers: 11301021

(i) $-7-24i$

Solution:

Let

$z = x+iy = -7-24i$

$\Rightarrow x=-7, y=-24$

$|z| = \sqrt{x^2+y^2}$

$|z| = \sqrt{(-7)^2+(-24)^2}$

$|z| = \sqrt{49+576}$

$|z| = \sqrt{625} = 25$

Now,

$$\sqrt{z} = \sqrt{x+iy}$$

$$= \pm\left(\sqrt{\frac{|z|+x}{2}} + i\frac{y}{|y|}\sqrt{\frac{|z|-x}{2}}\right)$$

$$= \pm\left(\sqrt{\frac{25+(-7)}{2}} + i\frac{-24}{|-24|}\sqrt{\frac{25-(-7)}{2}}\right)$$

$$= \pm\left(\sqrt{\frac{25-7}{2}} + i\frac{-24}{24}\sqrt{\frac{25+7}{2}}\right)$$

$$= \pm\left(\sqrt{\frac{18}{2}} - i\sqrt{\frac{32}{2}}\right)$$

$$= \pm\left(\sqrt{9} - i\sqrt{16}\right)$$

$$= \pm(3-4i)$$

$$= 3-4i \quad or \quad -(3-4i)$$

$\sqrt{-7-24i} = 3-4i \quad or \quad -3+4i$

(ii) $8-6i$

Solution:

Let $z = x+iy = 8-6i \Rightarrow x=8, y=-6$

$|z| = \sqrt{x^2+y^2}$

$|z| = \sqrt{(8)^2+(-6)^2}$

$|z| = \sqrt{64+36}$

$|z| = \sqrt{100} = 10$

Now,

$$\sqrt{z} = \sqrt{x+iy}$$

$$= \pm\left(\sqrt{\frac{|z|+x}{2}} + i\frac{y}{|y|}\sqrt{\frac{|z|-x}{2}}\right)$$

$$= \pm\left(\sqrt{\frac{10+8}{2}} + i\frac{-6}{|-6|}\sqrt{\frac{10-8}{2}}\right)$$

$$= \pm\left(\sqrt{\frac{18}{2}} + i\frac{-6}{6}\sqrt{\frac{2}{2}}\right)$$

$$= \pm\left(\sqrt{9} - i\sqrt{1}\right)$$

$$= \pm(3-i)$$

$\sqrt{8-6i} = 3-i, -(3-i)$

$\sqrt{8-6i} = 3-i, -3+i$

(iii) $-15-36i$

Solution:

Let $z = x+iy = -15-36i$

$\Rightarrow x=-15, y=-36$

$|z| = \sqrt{x^2+y^2}$

$|z| = \sqrt{(-15)^2+(-36)^2}$

$|z| = \sqrt{225+1296}$

$|z| = \sqrt{1521} = 39$

Now,

$$\sqrt{z} = \sqrt{x+iy}$$

$$= \pm\left(\sqrt{\frac{|z|+x}{2}} + i\frac{y}{|y|}\sqrt{\frac{|z|-x}{2}}\right)$$

$$= \pm\left(\sqrt{\frac{39+(-15)}{2}} + i\frac{-36}{|-36|}\sqrt{\frac{39-(-15)}{2}}\right)$$

$$= \pm\left(\sqrt{\frac{39-15}{2}} + i\frac{-36}{36}\sqrt{\frac{39+15}{2}}\right)$$

$$= \pm\left(\sqrt{\frac{24}{2}} - i\sqrt{\frac{54}{2}}\right)$$

$= \pm\left(\sqrt{12} - i\sqrt{27}\right)$

$= \pm\left(2\sqrt{3} - i3\sqrt{3}\right)$

$= 2\sqrt{3} - i3\sqrt{3}, -\left(2\sqrt{3} - i3\sqrt{3}\right)$

$\sqrt{-15-36i} = 2\sqrt{3} - i3\sqrt{3}, -2\sqrt{3} + i3\sqrt{3}$

(iv) $119 + 120i$

Solution:

$Let\ z = x + iy = 119 + 120i$

$\Rightarrow x = 119, y = 120$

$|z| = \sqrt{x^2 + y^2}$

$|z| = \sqrt{(119)^2 + (120)^2}$

$|z| = \sqrt{14161 + 14400}$

$|z| = \sqrt{28561} = 169$

Now,

$$\sqrt{z} = \sqrt{x+iy}$$

$$= \pm\left(\sqrt{\frac{|z|+x}{2}} + i\frac{x}{|y|}\sqrt{\frac{|z|-x}{2}}\right)$$

$$= \pm\left(\sqrt{\frac{169+119}{2}} + i\frac{120}{|120|}\sqrt{\frac{169-119}{2}}\right)$$

$$= \pm\left(\sqrt{\frac{288}{2}} + i\frac{120}{120}\sqrt{\frac{50}{2}}\right)$$

$$= \pm\left(\sqrt{144} + i\sqrt{25}\right)$$

$$= \pm(12 + 5i)$$

$$= 12 + 5i, -(12 + 5i)$$

$\sqrt{119+120i} = 12 + 5i, -12 - 5i$

Q.8 Find the square root of $13 - 20\sqrt{3}i$ and represent it on an Argand diagram. **11301022**

Solution:

Let $z = x + iy = 13 - 20\sqrt{3}i$

$\Rightarrow x = 13, y = -20\sqrt{3}$

$|z| = \sqrt{x^2 + y^2}$

$|z| = \sqrt{(13)^2 + \left(-20\sqrt{3}\right)^2}$

$|z| = \sqrt{169 + 1200}$

$|z| = \sqrt{1369} = 37$

Now, $\sqrt{z} = \sqrt{x+iy}$

$$= \pm\left(\sqrt{\frac{|z|+x}{2}} + i\frac{y}{|y|}\sqrt{\frac{|z|-x}{2}}\right)$$

$$= \pm\left(\sqrt{\frac{37+13}{2}} + i\frac{-20\sqrt{3}}{\left|-20\sqrt{3}\right|}\sqrt{\frac{37-13}{2}}\right)$$

$$= \pm\left(\sqrt{\frac{50}{2}} + i\frac{-20\sqrt{3}}{20\sqrt{3}}\sqrt{\frac{24}{2}}\right)$$

$$= \pm\left(\sqrt{25} - i\sqrt{12}\right)$$

$$= \pm\left(5 - i2\sqrt{3}\right)$$

Argand Diagram:

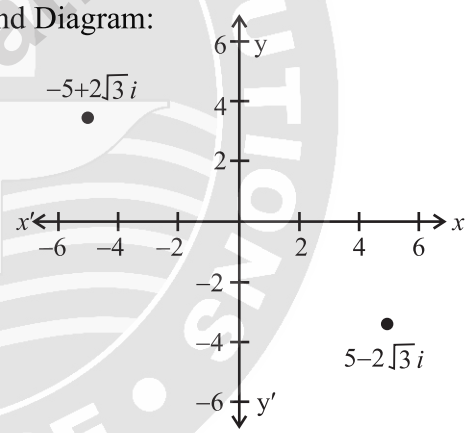

Q.9 Find the real values of x and y if:
$(-7+i)(x+iy) + (-1-5i) = i(11-i)$. **11301023**

Solution:

Given that:

$(-7+i)(x+iy) + (-1-5i) = i(11-i)$

$\Rightarrow -7x - 7iy + ix + i^2y - 1 - 5i = 11i - i^2$

$\Rightarrow -7x - 7iy + ix + (-1)y - 1 - 5i = 11i - (-1)$

$\Rightarrow -7x - 7iy + ix - y - 1 - 5i = 11i + 1$

$\Rightarrow -7x - y - 1 + ix - 7iy - 5i = 11i + 1$

$\Rightarrow (-7x - y - 1) + i(x - 7y - 5) = 1 + 11i$

Comparing the real and imaginary parts, we get

$$-7x-y-1=1$$
$$\Rightarrow -7x-y=1+1$$
$$\Rightarrow -7x-y=2 \quad ...(i)$$

Now,

$$x-7y-5=11$$
$$\Rightarrow x-7y=11+5$$
$$\Rightarrow x-7y=16 \quad ...(ii)$$

Form eq. (ii)

$$x=16+7y \quad ...(iii)$$

Putting this value of x in eq. (i). we get

$$-7(16+7y)-y=2$$
$$\Rightarrow -112-49y-y=2$$
$$\Rightarrow -50y=2+112$$
$$\Rightarrow -50y=114$$
$$\Rightarrow y=\frac{114}{-50}$$
$$\Rightarrow y=-\frac{57}{25}$$

$\therefore$ Equation (iii) becomes:

$$x=16+7\left(-\frac{57}{25}\right)$$
$$x=16-\frac{399}{25}$$
$$x=\frac{400-399}{25}=\frac{1}{25}$$

Thus, $x=\frac{1}{25}$ and $y=-\frac{57}{25}$

Q.10 Find the real values of x and y if $(5-2i)(x+iy)+3=i(11-i)-4i$. **11301024**

Solution:

Given that:

$$(5-2i)(x+iy)+3=i(11-i)-4i$$
$$5x+5iy-2ix-2i^2y+3=11i-i^2-4i$$
$$5x+5iy-2ix-2(-1)y+3=11i-(-1)-4i$$
$$5x+5iy-2ix+2y+3=7i+1$$
$$(5x+2y+3)+i(5y-2x)=1+7i$$

Comparing the real and imaginary parts, we get

$$5x+2y+3=1$$
$$5x+2y=1-3$$
$$5x+2y=-2 \quad ...(i)$$
$$5y-2x=7$$
$$\Rightarrow -2x+5y=7 \quad ...(ii)$$

Multiplying Eq. (i) by 2 and Eq. (ii) by 5, and then adding

$$10x+4y=-4$$
$$-10x+25y=35$$
$$29y=31$$
$$\Rightarrow y=\frac{31}{29}$$

$\therefore$ Equation (i) becomes

$$5x+2\left(\frac{31}{29}\right)=-2$$
$$\Rightarrow 5x+\frac{62}{29}=-2$$
$$\Rightarrow 5x=-2-\frac{62}{29}$$
$$5x=\frac{-58-62}{29}$$
$$\Rightarrow 5x=\frac{-58-62}{29}$$
$$\Rightarrow 5x=\frac{-120}{29}$$
$$\Rightarrow x=\frac{-120}{29}\times\frac{1}{5}$$
$$\Rightarrow x=-\frac{24}{29}$$

Thus, $x=-\frac{24}{29}$ and $y=\frac{31}{29}$.

Q.11 Find the real values of u and v if: $\frac{u-2}{2+i}+\frac{v-3}{2-i}=4i$. **11301025**

Solution:

Given that: $\frac{u-2}{2+i}+\frac{v-3}{2-i}=4i$

$$\frac{u-2}{2+i}\times\frac{2-i}{2-i}+\frac{v-3}{2-i}\times\frac{2+i}{2+i}=4i$$

$$\frac{(u-2)(2-i)}{(2+i)(2-i)}+\frac{(v-3)(2+i)}{(2-i)(2+i)}=4i$$

$$\frac{2u-iu-4+2i}{2^2-i^2}+\frac{2v+iv-6-3i}{2^2-i^2}=4i \because i^2=-1$$

$$\frac{2u-iu-4+2i}{4-(-1)}+\frac{2v+iv-6-3i}{4-(-1)}=4i$$

$$\frac{2u-iu-4+2i}{4+1}+\frac{2v+iv-6-3i}{4+1}=4i$$

$$\frac{2u-iu-4+2i}{5}+\frac{2v+iv-6-3i}{5}=4i$$

$$\frac{2u-iu-4+2i+2v+iv-6-3i}{5}=4i$$

$$(2u+2v-10)+i(v-u-1)=0+20i$$

By comparing the real and imaginary parts, we get:

$2u+2v-10=0 \quad ...(\text{i})$

$v-u-1=20 \quad ....(\text{ii})$

From equation (i) we get:

$2u+2v=10$

$2(u+v)=10$

$u+v=\frac{10}{2}$

$u+v=5$

$\Rightarrow u=5-v \quad ....(\text{iii})$

Using (iii) in (ii), we have

$v-(5-v)-1=20$

$v-5+v-1=20$

$2v-6=20$

$2v=20+6$

$2v=26$

$v=\frac{26}{2}$

$v=13$

Putting $v=13$ in equation (iii), we have

$u=5-13$

$u=-8$

Thus, $u=-8$, $v=13$

Q.12 If $z_1=4+5i$ and $z_2=\alpha-2i$, find the real value of α such that $\text{Re}(z_1z_2)=20$. **11301026**

Solution:

Given that:

$z_1=4+5i$ and $z_2=\alpha-2i$

$\text{Re}(z_1z_2)=20$

$\Rightarrow \text{Re}[(4+5i)(\alpha-2i)]=20$

$\Rightarrow \text{Re}[4\alpha-8i+5i\alpha-10i^2]=20$

$\Rightarrow \text{Re}[4\alpha-8i+5i\alpha-10(-1)]=20$

$\Rightarrow \text{Re}[4\alpha-8i+5i\alpha+10]=20$

$\Rightarrow \text{Re}[4\alpha+10+5i\alpha-8i]=20$

$\Rightarrow \text{Re}[(4\alpha+10)+i(5\alpha-8)]=20+i.0$

$\Rightarrow 4\alpha+10=20$

$\Rightarrow 4\alpha=20-10$

$\Rightarrow 4\alpha=10$

$\Rightarrow \alpha=\frac{10}{4}$

$\Rightarrow \alpha=\frac{5}{2}$

Complex Polynomials as a Product of Linear Factors:

A complex polynomial $P(z)$ is a polynomial function of the complex variable z with complex coefficients $a_n, a_{n-1}, a_{n-2}, ..., a_1, a_0$ can be expressed in the general form as:

$P(z)=a_nz^n+a_{n-1}z^{n-1}+a_{n-2}z^{n-2}+...+a_1z+a_0$,

where $n\geq 0$ is an integer.

When $a_n\neq 0$ then $P(z)$ is a complex polynomial of degree n. According to the

Fundamental theorem of algebra, a polynomial of degree $n \geq 1$ has exactly n roots in complex number system C. So, a complex polynomial can be expressed as a product n linear factors. i.e.

$P(z) = a_n(z - z_1)(z - z_2)...(z - z_n)$

Example 6: Factorize the polynomial

$P(z) = z^2 + (i-3)z - 3i.$ **11301027**

Solution:

$$p(z) = z^2 + (i-3)z - 3i$$
$$p(z) = z^2 + zi - 3z - 3i$$
$$p(z) = z(z+i) - 3(z+i)$$
$$p(z) = (z+i)(z-3)$$

Example 7: Factorize the polynomial

$P(z) = z^2 - 4iz + 12$ **11301028**

Solution:

$$P(z) = z^2 - 4iz + 12$$
$$= z^2 - 4iz - (-12)$$
$$= z^2 - 4iz - i^2 12 \qquad \because i^2 = -1$$
$$= z^2 - i6z + i2z - i^2 12$$
$$= z(z - 6i) + 2i(z - 6i)$$
$$= (z - 6i)(z + 2i)$$

Example 8: Factorize the polynomial

$P(z) = z^3 + (1+i)z^2 + iz$. **11301029**

Solution

$$P(z) = z^3 + (1+i)z^2 + iz$$
$$= z\left[z^2 + (1+i)z + i\right]$$
$$= z\left[z^2 + z + iz + i\right]$$
$$= z\left[z(z+1) + i(z+1)\right]$$
$$= z\left[(z+1)(z+i)\right]$$
$$= z(z+1)(z+i)$$

KEY CONCEPT

The Rational Root Theorem is a mathematical tool used to find all possible rational roots of a polynomial equation with integer coefficients. According to rational root theorem:

If a polynomial

$P(x) = a_n x^n + a_{n-1}x^{n-1} + ... + a_1 x + a_0$ has integer coefficients, then every rational root $\frac{p}{q}$ (in simplest terms) satisfies:

(i) p is a factor of the constant term a_0.

(ii) q is a factor of the leading coefficient a_n.

Example 9: Factorize the polynomial

$P(z) = z^3 - 3z^2 + z + 5$. **11301030**

Solution:

According to rational root theorem the possible root of the equation are ± 1 and ± 5. On checking, we see that $z = -1$ is the root of the polynomial $P(z)$ because

$$P(-1) = (-1)^3 - 3(-1)^2 + (-1) + 5$$
$$P(-1) = -1 - 3 - 1 + 5$$
$$P(-1) = -5 + 5 = 0$$

So, $z + 1$ is a factor of the $P(z)$. Using synthetic division

-1	1	-3	1	5
		-1	4	-5
	1	-4	5	0

Therefore,

$z^3 - 3z^2 + z + 5 = (z+1)(z^2 - 4z + 5)$ ...(i)

Next find the factors of $z^2 - 4z + 5$

By using quadratic formula:

$z^2 - 4z + 5 = 0$

Here $a = 1, b = -4, c = 5$

$$z = \frac{-(-4) \pm \sqrt{(-4)^2 - 4(1)(5)}}{2(1)}$$

$$z = \frac{4 \pm \sqrt{16 - 20}}{2}$$

$$z=\frac{4\pm\sqrt{16-20}}{2}$$
$$z=\frac{4\pm\sqrt{-4}}{2}$$
$$z=\frac{4\pm 2i}{2}$$
$$z=2\pm 2i$$
The quadratic factors are
$$z^2-4z+5=\left[z-(2+i)\right]\left[z-(2-i)\right]$$
$$=(z-2-i)(z-2+i)$$
Substitutes in equation (i), we have the
$$z^3-3z^2+z+5=(z+1)(z-2-i)(z-2+i)$$

Solution of quadratic equation by completing square

Example 10: Solve the equation $2z^2-12z+50=0$ by completing square method and hence express it as a product of its linear factors. 11301031

Solution:

$$2z^2-12z+50=0$$
Dividing both sides by 2
$$z^2-6z+25=0$$
$$\Rightarrow \quad z^2-2(3)z=-25$$
Add 3^2 on both sides
$$z^2-2(3)z+3^2=-25+3^2$$
$$(z-3)^2=-16$$
$$\Rightarrow \quad z-3=\pm\sqrt{-16}$$
$$\Rightarrow \quad z=3\pm 4i$$
Therefore, $z=3+4i$ or $z=3-4i$ are the required complex roots.

Using the corollary of Fundamental theorem of Algebra the equation can be factorized using the roots $3+4i$ and $3-4i$ as:
$$2z^2-12z+50=2\left(z^2-6z+25\right)$$
$$=2\left[z-(3+4i)\right]\left[z-(3-4i)\right]$$
$$=2(z-3-4i)(z-3+4i)$$

Hence,
$$2z^2-12z+50=2(z-3-4i)(z-3+4i)$$

EXERCISE 1.3

Q.1 Factorize the following: 11301032

(i) a^2+4b^2

Solution:
$$a^2+4b^2=a^2-(-1)4b^2$$
$$=a^2-i^2 2^2 b^2$$
$$=(a)^2-(i2b)^2$$
$$=(a+i2b)(a-i2b)$$

(ii) $9a^2+16b^2$

Solution:
$$9a^2+16b^2=9a^2-(-1)16b^2$$
$$=9a^2-i^2 4^2 b^2$$
$$=(3a)^2-(i4b)^2$$
$$=(3a+i4b)(3a-i4b)$$

(iii) $3x^2+3y^2$

Solution:
$$3x^2+3y^2=3\left(x^2+y^2\right)$$
$$=3\left[x^2-(-1)y^2\right]$$
$$=3\left[x^2-i^2y^2\right]$$
$$=3\left[(x)^2-(iy)^2\right]$$
$$=3(x+iy)(x-iy)$$

(iv) $144x^2+225y^2$

Solution:
$$144x^2+225y^2=9\left[16x^2+25y^2\right]$$
$$=9\left[(4x)^2-(-1)(5y)^2\right]$$
$$=9\left[(4x)^2-(5iy)^2\right]$$
$$=9(4x+5iy)(4x-5iy)$$

(v) $z^2-2iz-1$

Solution:

$$z^2-2iz-1=z^2-2(z)(i)-1$$
$$=z^2-2(z)(i)+i^2$$
$$=(z-i)^2$$
$$=(z-i)(z-i)$$

(vi) $z^2+6z+13$

Solution:

$$z^2+6z+13=z^2+2(z)(3)+13$$
$$=z^2+2(z)(3)+3^2+13-3^2$$
$$=(z+3)^2+13-9$$
$$=(z+3)^2+4$$
$$=(z+3)^2-(-1)4$$
$$=(z+3)^2-i^2 4$$
$$=(z+3)^2-(2i)^2$$
$$=(z+3+2i)(z+3-2i)$$

(vii) z^2+4z+5

Solution:

$$z^2+4z+5=z^2+2(z)(2)+5$$
$$=z^2+2(z)(2)+2^2+5-2^2$$
$$=(z+2)^2+5-4$$
$$=(z+2)^2+1$$
$$=(z+2)^2-(-1)$$
$$=(z+2)^2-i^2$$
$$=(z+2+i)(z+2-i)$$

(viii) $2z^2-22z+65$

Solution:

$$2z^2-22z+65=2\left(z^2-11z+\frac{65}{2}\right)$$
$$=2\left[z^2-2(z)\left(\frac{11}{2}\right)+\frac{65}{2}\right]$$
$$=2\left[z^2-2(z)\left(\frac{11}{2}\right)+\left(\frac{11}{2}\right)^2+\frac{65}{2}-\left(\frac{11}{2}\right)^2\right]$$
$$=2\left[\left(z-\frac{11}{2}\right)^2+\frac{65}{2}-\frac{121}{4}\right]$$
$$=2\left[\left(z-\frac{11}{2}\right)^2+\frac{130-121}{4}\right]$$
$$=2\left[\left(z-\frac{11}{2}\right)^2+\frac{9}{4}\right]$$
$$=2\left[\left(z-\frac{11}{2}\right)^2-(-1)\left(\frac{9}{4}\right)\right]$$
$$=2\left[\left(z-\frac{11}{2}\right)^2-i^2\left(\frac{9}{4}\right)\right]$$
$$=2\left[\left(z-\frac{11}{2}\right)^2-\left(\frac{3i}{2}\right)^2\right]$$
$$=2\left(z-\frac{11}{2}+\frac{3i}{2}\right)\left(z-\frac{11}{2}-\frac{3i}{2}\right)$$
$$=2\left(z-\frac{11-3i}{2}\right)\left(z-\frac{11+3i}{2}\right)$$

Q.2 Factorize the following polynomials into its linear factors. **11301033**

(i) z^3+8

Solution:

$$z^3+8=z^3+2^3$$
$$=(z+2)(z^2-2z+4)$$
$$=(z+2)(z^2-2.z.1+1^2+4-1^2)$$
$$=(z+2)\{(z-1)^2+4-1\}$$
$$=(z+2)\{(z-1)^2+3\}$$
$$=(z+2)\{(z-1)^2-(-1)3\}$$
$$=(z+2)\{(z-1)^2-i^2(\sqrt{3})^2\}$$
$$=(z+2)\{(z-1)^2-(i\sqrt{3})^2\}$$
$$=(z+2)(z-1+i\sqrt{3})(z-1-i\sqrt{3})$$

(ii) z^3+27

Solution:

$$z^3+27=z^3+3^3$$
$$=(z+3)(z^2-3z+9)$$
$$=(z+3)\left\{z^2-2(z)\left(\frac{3}{2}\right)+\left(\frac{3}{2}\right)^2+9-\left(\frac{3}{2}\right)^2\right\}$$
$$=(z+3)\left\{\left(z-\frac{3}{2}\right)^2+9-\frac{9}{4}\right\}$$
$$=(z+3)\left\{\left(z-\frac{3}{2}\right)^2+\frac{36-9}{4}\right\}$$
$$=(z+3)\left\{\left(z-\frac{3}{2}\right)^2+\frac{27}{4}\right\}$$
$$=(z+3)\left\{\left(z-\frac{3}{2}\right)^2-(-1)\frac{27}{4}\right\}$$
$$=(z+3)\left\{\left(z-\frac{3}{2}\right)^2-i^2\left(\frac{\sqrt{27}}{2}\right)^2\right\}$$
$$=(z+3)\left\{\left(z-\frac{3}{2}\right)^2-\left(i\frac{\sqrt{27}}{2}\right)^2\right\}$$
$$=(z+3)\left(z-\frac{3}{2}+i\frac{\sqrt{27}}{2}\right)\left(z-\frac{3}{2}-i\frac{\sqrt{27}}{2}\right)$$
$$=(z+3)\left(z-\frac{3}{2}+i\frac{3\sqrt{3}}{2}\right)\left(z-\frac{3}{2}-i\frac{3\sqrt{3}}{2}\right)$$

(iii) $z^3-2z^2+16z-32$

Solution:

$$z^3-2z^2+16z-32=z^2(z-2)+16(z-2)$$
$$=(z-2)(z^2+16)$$
$$=(z-2)\{z^2-(-1)16\}$$
$$=(z-2)\{z^2-i^2 4^2\}$$
$$=(z-2)\{z^2-(4i)^2\}$$
$$=(z-2)(z-4i)(z+4i)$$

(iv) z^4+21z^2-100

Solution:

$$z^4+21z^2-100=z^4+25z^2-4z^2-100$$
$$=z^2(z^2+25)-4(z^2-25)$$
$$=(z^2+25)(z^2-4)$$
$$=\{z^2-(-1)25\}(z^2-4)$$
$$=\{z^2-i^2 5^2\}(z^2-2^2)$$
$$=\{z^2-(5i)^2\}(z^2-2^2)$$
$$=(z-5i)(z+5i)(z-2)(z+2)$$

(v) z^4-16

Solution:

$$z^4-16=(z^2)^2-(4)^2$$
$$=(z^2+4)(z^2-4)$$
$$=\{z^2-(-1)4\}(z^2-4)$$
$$=\{z^2-i^2 2^2\}(z^2-2^2)$$
$$=\{z^2-(2i)^2\}(z^2-2^2)$$
$$=(z-2i)(z+2i)(z-2)(z+2)$$

(vi) z^4+3z^2-4

Solution:

$$z^4+3z^2-4=z^4+4z^2-z^2-4$$
$$=z^2(z^2+4)-1(z^2+4)$$
$$=(z^2+4)(z^2-1)$$
$$=\{z^2-(-1)4\}(z^2-1)$$
$$=\{z^2-i^2 2^2\}(z^2-1)$$
$$=\{z^2-(2i)^2\}(z^2-1^2)$$
$$=(z-2i)(z+2i)(z-1)(z+1)$$

(vii) z^4+5z^2+6

Solution:

$$z^4+5z^2+6=z^4+3z^2+2z^2+6$$
$$=z^2\left(z^2+3\right)+2\left(z^2+3\right)$$
$$=\left(z^2+3\right)\left(z^2+2\right)$$
$$=\left\{z^2-(-1)\left(\sqrt{3}\right)^2\right\}\left\{z^2-(-1)\left(\sqrt{2}\right)^2\right\}$$
$$=\left\{z^2-i^2\left(\sqrt{3}\right)^2\right\}\left\{z^2-i^2\left(\sqrt{2}\right)^2\right\}$$
$$=\left(z-\sqrt{3}i\right)\left(z+\sqrt{3}i\right)\left(z-\sqrt{2}i\right)\left(z+\sqrt{2}i\right)$$

(viii) z^4-32z^2-3969

Solution:

$$z^4-32z^2-3969$$
$$=z^4-81z^2+49z^2-3969$$
$$=z^2\left(z^2-81\right)+49\left(z^2-81\right)$$
$$=\left(z^2-81\right)\left(z^2+49\right)$$
$$=\left(z^2-9^2\right)\left(z^2-(-1)7^2\right)$$
$$=\left(z^2-9^2\right)\left(z^2-i^2 7^2\right)$$
$$=(z-9)(z+9)(z-7i)(z+7i)$$

Q.3 Find the roots of $z^4+7z^2-144=0$ and hence express it as a product of linear factors. **11301034**

Solution:

$$z^4+7z^2-144=0$$
$$\Rightarrow z^4+16z^2-9z^2-144=0$$
$$\Rightarrow z^2\left(z^2+16\right)-9\left(z^2+16\right)=0$$
$$\Rightarrow\left(z^2+16\right)\left(z^2-9\right)=0$$
$$\Rightarrow\left[z^2-(4i)^2\right]\left[z^2-(3)^2\right]=0$$
$$(z+4i)(z-4i)(z+3)(z-3)=0$$
$$z+4i=0,\ z-4i=0, z+3=0, z-3=0$$
$$z=-4i,\quad z=4i,\quad z=-3,\ z=3$$

(roots of given equation).

The given equation can be expressed as:

$$z^4+7z^2-144=(z+4i)(z-4i)(z+3)(z-3)$$

Steps involving completing square method

Step 1: Shift constant term to right side.

Step 2: Divide the equation by coefficient of Z^2.

Step 3: Add $\left(\frac{\text{coefficient of } Z}{2}\right)^2$ to both sides.

Step 4: Take square root on both sides.

Q.4 Solve the following complex quadratic equations by completing square method. **11301035**

(i) $2z^2-3z+4=0$

Solution:

$$2z^2-3z+4=0$$
$$2z^2-3z=-4$$

Dividing by 2, we get

$$\frac{2z^2}{2}-\frac{3}{2}z=\frac{-4}{2}$$
$$z^2-\frac{3}{2}z=-2$$

Adding $\left(\frac{3}{4}\right)^2$ to both sides, we have

$$z^2-\frac{3}{2}z+\left(\frac{3}{4}\right)^2=-2+\left(\frac{3}{4}\right)^2$$
$$\left(z-\frac{3}{4}\right)^2=-2+\frac{9}{16}$$
$$\left(z-\frac{3}{4}\right)^2=\frac{-32+9}{16}$$
$$\left(z-\frac{3}{4}\right)^2=-\frac{23}{16}$$

Taking square root on both sides

$$z-\frac{3}{4}=\pm\sqrt{-\frac{23}{16}}$$
$$z-\frac{3}{4}=\pm\frac{i\sqrt{23}}{4}$$

$$z=\frac{3}{4}\pm\frac{i\sqrt{23}}{4}$$

$$z=\frac{3\pm i\sqrt{23}}{4}$$

(ii) $z^2-6z+30=0$

Solution:

$z^2-6z+30=0$

$z^2-6z=-30$

Adding $(3)^2$ to both sides, we have

$z^2-6z+3^2=-30+3^2$

$(z-3)^2=-30+9$

$(z-3)^2=-21$

Taking square root on both sides, we have

$z-3=\pm\sqrt{-21}$

$z-3=\pm i\sqrt{21}$

$z=3\pm i\sqrt{21}$

(iii) $3z^2-18z+50=0$

Solution:

$3z^2-18z+50=0$

$3z^2-18z=-50$

Dividing by 3, we get

$$\frac{3z^2}{3}-\frac{18z}{3}=\frac{-50}{3}$$

$$z^2-6z=-\frac{50}{3}$$

Adding $(3)^2$ to both sides, we have

$$z^2-6z+3^2=-\frac{50}{3}+3^2$$

$$(z-3)^2=-\frac{50}{3}+9$$

$$(z-3)^2=\frac{-50+27}{3}$$

$$(z-3)^2=-\frac{23}{3}$$

Taking square root on both sides, we get

$$z-3=\pm\sqrt{-\frac{23}{3}}$$

$$z-3=\pm i\frac{\sqrt{23}}{\sqrt{3}}\times\frac{\sqrt{3}}{\sqrt{3}}$$

$$z=3\pm i\frac{\sqrt{69}}{\left(\sqrt{3}\right)^2}$$

$$z=3\pm i\frac{\sqrt{69}}{3}$$

(iv) $z^2+4z+13=0$

Solution:

$z^2+4z+13=0$

$z^2+4z=-13$

Adding $(2)^2$ to both sides , we get

$z^2+4z+2^2=-13+2^2$

$(z+2)^2=-13+4$

$(z+2)^2=-9$

Taking square root on both sides, we get

$z+2=\pm\sqrt{-9}$

$z+2=\pm 3i$

$z=-2\pm 3i$

(v) $2z^2+6z+9=0$

Solution:

$2z^2+6z+9=0$

$2z^2+6z=-9$

Dividing by 2 on both sides, we get

$$\frac{2z^2}{2}+\frac{6z}{2}=\frac{-9}{2}$$

$$z^2+3z=\frac{-9}{2}$$

Adding $\left(\frac{3}{2}\right)^2$ on both sides

$$z^2+3z+\left(\frac{3}{2}\right)^2=\frac{-9}{2}+\left(\frac{3}{2}\right)^2$$

$$\left(z+\frac{3}{2}\right)^2=\frac{-9}{2}+\frac{9}{4}$$

$$\left(z+\frac{3}{2}\right)^2=\frac{-18+9}{4}$$

$$\left(z+\frac{3}{2}\right)^2=\frac{-9}{4}$$

Taking square root on both sides

$$z+\frac{3}{2}=\pm\sqrt{\frac{-9}{4}}$$

$$z+\frac{3}{2}=\pm i\sqrt{\frac{9}{4}}$$

$$z=-\frac{3}{2}\pm\frac{3}{2}i$$

(vi) $3z^2-5z+7=0$

Solution:

$3z^2-5z+7=0$

$3z^2-5z=-7$

Dividing by 3, we get

$$\frac{3z^2}{3}-\frac{5z}{3}=-\frac{7}{3}$$

$$z^2-\frac{5}{3}z=-\frac{7}{3}$$

Adding $\left(\frac{5}{6}\right)^2$ to both sides

$$z^2-\frac{5}{3}z+\left(\frac{5}{6}\right)^2=-\frac{7}{3}+\left(\frac{5}{6}\right)^2$$

$$\left(z-\frac{5}{6}\right)^2=-\frac{7}{3}+\frac{25}{36}$$

$$\left(z-\frac{5}{6}\right)^2=\frac{-84+25}{36}$$

$$\left(z-\frac{5}{6}\right)^2=-\frac{59}{36}$$

Taking square root on both sides

$$z-\frac{5}{6}=\pm\sqrt{-\frac{59}{36}}$$

$$z-\frac{5}{6}=\pm\frac{\sqrt{59}}{6}i$$

$$z=\frac{5}{6}\pm\frac{\sqrt{59}}{6}i=\frac{5\pm\sqrt{59}i}{6}$$

Q.5 Solve the following equations:

11301036

(i) $2z^4-32=0$

Solution:

$2z^4-32=0$

Dividing by 2, we get

$z^4-16=0$

$\Rightarrow\left(z^2\right)^2-4^2=0$

$\Rightarrow\left(z^2-4\right)\left(z^2+4\right)=0$

$\Rightarrow z^2-4=0$ or $z^2+4=0$

$\Rightarrow z^2=4$ or $z^2=-4$

$\Rightarrow z=\pm\sqrt{4}$ or $z=\pm\sqrt{-4}$

$\Rightarrow z=\pm2$ or $z=\pm2i$

So, $z=2,-2,2i,-2i$

(ii) $3z^5-243z=0$

Solution:

$3z^5-243z=0$

Dividing by 3, we get

$z^5-81z=0$

$\Rightarrow z\left(z^4-81\right)=0$

$\Rightarrow z=0$ or $z^4-81=0$

Now, $\left(z^2\right)^2-9^2=0$

$\left(z^2-9\right)\left(z^2+9\right)=0$

$z^2-9=0$ or $z^2+9=0$

$z^2=9$ or $z^2=-9$

$z=\pm\sqrt{9}$ or $z=\pm\sqrt{-9}$

$\Rightarrow z=0$ or $z=\pm3$ or $z=\pm3i$

So, $z=0,3,-3,3i,-3i$

(iii) $5z^5-5z=0$

Solution:

$5z^5-5z=0$

Dividing by 5, we get

$z^5 - z = 0$

$\Rightarrow z\left(z^4 - 1\right) = 0$

$\Rightarrow z = 0$ or $z^4 - 1 = 0$

Now, $\left(z^2\right)^2 - 1^2 = 0$

$\left(z^2 - 1\right)\left(z^2 + 1\right) = 0$

$z^2 - 1 = 0$ or $z^2 + 1 = 0$

$z^2 = 1$ or $z^2 = -1$

$z = \pm\sqrt{1}$ or $z = \pm\sqrt{-1}$

$\Rightarrow z = 0$ or $z = \pm 1$ or $z = \pm i$

So, $z = 0, 1, -1, i, -i$

(iv) $z^3 - 5z^2 + z - 5 = 0$

Solution:

$z^3 - 5z^2 + z - 5 = 0$

$\Rightarrow z^2\left(z - 5\right) + 1\left(z - 5\right) = 0$

$\Rightarrow \left(z - 5\right)\left(z^2 + 1\right) = 0$

$\Rightarrow z - 5 = 0$ or $z^2 + 1 = 0$

$z^2 = -1$ or $z = \pm\sqrt{-1}$

$\Rightarrow z = 5$ or $z = \pm i$

$\Rightarrow z = 5, i, -i$

(v) $4z^4 - 25z^2 - 21 = 0$

Solution:

$4z^4 - 25z^2 - 21 = 0$

$\Rightarrow 4\left(z^2\right)^2 - 25z^2 - 21 = 0$

Let $z^2 = x$, then

$4x^2 - 25x - 21 = 0$

Here $a = 4, b = -25, c = -21$

By quadratic formula, we have

$$x = \frac{-b \pm \sqrt{b^2 - 4ac}}{2a}$$

$$x = \frac{-(-25) \pm \sqrt{(-25)^2 - 4(4)(-21)}}{2(4)}$$

$$x = \frac{25 \pm \sqrt{625 + 336}}{8}$$

$$x = \frac{25 \pm \sqrt{961}}{8}$$

$$x = \frac{25 \pm 31}{8}$$

$$x = \frac{25 + 31}{8}, x = \frac{25 - 31}{8}$$

$$x = \frac{56}{8}, x = \frac{-6}{8}$$

$$x = 7, x = \frac{-3}{4} \quad \because z^2 = x$$

$$\Rightarrow z^2 = 7, \quad z^2 = \frac{-3}{4}$$

$$\Rightarrow z = \pm\sqrt{7}, z = \pm\sqrt{\frac{-3}{4}}$$

$$\Rightarrow z = \pm\sqrt{7}, z = \pm\frac{\sqrt{3}i}{2}$$

(vi) $z^3 + z^2 + z + 1 = 0$

Solution:

$\Rightarrow z^2\left(z + 1\right) + 1\left(z + 1\right) = 0$

$\Rightarrow \left(z + 1\right)\left(z^2 + 1\right) = 0$

$\Rightarrow z + 1 = 0$ or $z^2 + 1 = 0$

$\Rightarrow z = -1$ or $z^2 = -1$

or $z = \pm\sqrt{-1}$

or $z = \pm i$

$\Rightarrow z = -1, \pm i$

Q.6 Find a polynomial $P(z)$ of degree 3 with zeros $3, -2i, 2i$ and satisfying $P(1) = 20$. **11301037**

Solution:

$\because 3, -2i, 2i$ are zeros of required polynomial.

$\therefore$ Let

$P(z) = a(z - 3)\left[z - (-2i)\right](z - 2i)$

$P(z) = a(z - 3)(z + 2i)(z - 2i)$ ...(i)

$P(1) = a(1 - 3)(1 + 2i)(1 - 2i)$

$P(1) = a(-2)\left[1^2 - (2i)^2\right]$

$= -2a\left[1 - 4i^2\right]$

$= -2a\left[1 - 4(-1)\right]$

$= -2a\left[1 + 4\right]$

$P(1) = -2a(5) = -10a$

Given that:

$P(1) = 20$

$\Rightarrow -10a = 20$

$\Rightarrow a = \dfrac{20}{-10}$

$\Rightarrow a = -2$

$\therefore$ Equation (i) becomes

$\Rightarrow P(z) = -2(z-3)(z+2i)(z-2i)$

$\Rightarrow P(z) = -2(z-3)\left[z^2 - (2i)^2\right]$

$\Rightarrow P(z) = -2(z-3)(z^2 - 4i^2)$

$\Rightarrow P(z) = -2(z-3)(z^2 - 4(-1))$

$\Rightarrow P(z) = -2(z-3)(z^2 + 4)$

$\Rightarrow P(z) = -2(z^3 + 4z - 3z^2 - 12)$

$\Rightarrow P(z) = -2(z^3 - 3z^2 + 4z - 12)$

$\Rightarrow P(z) = -2z^3 + 6z^2 - 8z + 24$

Q.7 Find a polynomial $p(z)$ of degree 4 with zeros $2i, -2i, 1, -1$ and satisfying $P(2) = 240$. **11301038**

Solution:

$\because 2i, -2i, 1, -1$ are zeros of required polynomial.

$\therefore$ Let

$P(z) = a(z-2i)(z+2i)(z-1)(z+1)$...(i)

$P(2) = a(2-2i)(2+2i)(2-1)(2+1)$

$= a\left[2^2 - (2i)^2\right](1)(3)$

$= 3a\left[4 - 4i^2\right]$

$= 3a\left[4 - 4(-1)\right]$

$= 3a[4+4]$

$= 3a(8) = 24a$

Given that:

$P(2) = 240$

$\Rightarrow 24a = 240$

$\Rightarrow a = \dfrac{240}{24}$

$\Rightarrow a = 10$

$\therefore$ Equation (i) becomes:

$\Rightarrow P(z) = 10(z-2i)(z+2i)(z-1)(z+1)$

$= 10\left[z^2 - (2i)^2\right]\left[z^2 - (1)^2\right]$

$= 10(z^2 - 4i^2)(z^2 - 1)$

$= 10(z^2 - 4(-1))(z^2 - 1)$

$= 10(z^2 + 4)(z^2 - 1)$

$= 10(z^4 - z^2 + 4z^2 - 4)$

$= 10(z^4 + 3z^2 - 4)$

$\Rightarrow P(z) = 10z^4 + 30z^2 - 40$

Q.8 Find a polynomial $p(z)$ of degree 4 with zeroes $4, -4, 1+i, 1-i$ and satisfying $P(2) = 72$. **11301039**

Solution:

$\because 4, -4, 1+i, 1-i$ are zeros of required polynomial.

$\therefore$ Let

$P(z) = a(z-4)(z+4)[z-(1+i)][z-(1-i)]$....(i)

$P(2) = a(2-4)(2+4)\left[2-(1+i)\right]\left[2-(1-i)\right]$

$P(2) = a(-2)(6)(2-1-i)(2-1+i)$

$P(2) = a(-12)(1-i)(1+i)$

$P(2) = -12a(1^2 - i^2)$

$P(2) = -12a[1-(-1)]$

$P(2) = -12a(1+1)$

$P(2) = -12a(2)$

$P(2) = -24a$

Given that:

$P(2) = 72$

$\Rightarrow -24a = 72$

$\Rightarrow a = -\dfrac{72}{24}$

$\Rightarrow a = -3$

$\therefore$ Equation (i) becomes

$$p(z)=-3(z-4)(z+4)[z-(1+i)][z-(1-i)]$$
$$p(z)=-3(z-4)(z+4)[z-1-i][z-1+i]$$
$$p(z)=-3(z^2-4^2)\left[(z-1)^2-i^2\right]$$
$$p(z)=-3(z^2-16)\left[(z-1)^2-(-1)\right]$$
$$p(z)=-3(z^2-16)(z^2-2z+1^2+1)$$
$$p(z)=-3(z^2-16)(z^2-2z+2)$$
$$p(z)=-3(z^4-2z^3+2z^2-16z^2+32z-32)$$
$$p(z)=-3(z^4-2z^3-14z^2+32z-32)$$
$$p(z)=-3z^4+6z^3+42z^2-96z+96$$

The three cube roots of unity

Let x be a cube root of unity.

Then $x=(1)^{\frac{1}{3}}$

Taking cube on both sides we get

$$x^3=1$$
$$\Rightarrow x^3-1=0$$
$$\Rightarrow (x)^3-(1)^3=0$$
$$\Rightarrow (x-1)(x^2+x+1)=0$$
$$\Rightarrow x-1=0 \text{ or } x^2+x+1=0$$
$$\Rightarrow x=1$$

Here $a=1, b=1, c=1$

Using quadratic formula i.e.

$$x=\frac{-b\pm\sqrt{b^2-4ac}}{2a}$$
$$x=\frac{-1\pm\sqrt{(1)^2-4(1)(1)}}{2(1)}$$
$$x=\frac{-1\pm\sqrt{1-4}}{2}$$
$$x=\frac{-1\pm\sqrt{-3}}{2}$$
$$x=\frac{-1\pm i\sqrt{3}}{2}$$

$\therefore$ three cube roots of unity are

$$1, \frac{-1+i\sqrt{3}}{2}, \frac{-1-i\sqrt{3}}{2}$$

Let $\omega=\frac{-1+i\sqrt{3}}{2}$ then

$$\omega^2=\left(\frac{-1+i\sqrt{3}}{2}\right)^2$$
$$\omega^2=\frac{1+i^2(\sqrt{3})^2+2(-1)(i\sqrt{3})}{4}$$
$$\omega^2=\frac{1+(-1)(3)-2i\sqrt{3}}{4}$$
$$\omega^2=\frac{-2-2i\sqrt{3}}{4}$$
$$\omega^2=\frac{2(-1-i\sqrt{3})}{4}$$
$$\omega^2=\frac{-1-i\sqrt{3}}{2}$$

$\therefore$ three cube roots of unity are $1, \omega, \omega^2$

Note:
We know that the numbers containing i are called imaginary numbers. So $\frac{-1+\sqrt{3}i}{2}$ and $\frac{-1-\sqrt{3}i}{2}$ are called imaginary cube roots of unity.

Properties of three cube roots of unity

(i) Each complex cube root of unity square of the other.

If $\frac{-1+\sqrt{3}i}{2}=\omega$ Then $\frac{-1-\sqrt{3}i}{2}=\omega^2$

and if $\frac{-1-\sqrt{3}i}{2}=\omega$ then $\frac{-1+\sqrt{3}i}{2}=\omega^2$

(ii) The sum of all the cube root of unity is zero. i.e., $1+\omega+\omega^2=0$

(iii) The product of all cube root of unity is one. i.e., $1.\omega.\omega^2=\omega^3=1$

As a consequence of which ,each imaginary cube root of unity is reciprocal of the other that is, $\omega = \frac{1}{\omega^2}, \omega^2 = \frac{1}{\omega}$.

Four fourth roots of unity

Let x be a fourth roof of unity.

Then $x = (1)^{\frac{1}{4}}$

$\Rightarrow x^4 = 1$

$\Rightarrow x^4 - 1 = 0$

$\Rightarrow (x^2)^2 - (1)^2 = 0$

$\Rightarrow (x^2 - 1)(x^2 + 1) = 0$

$\Rightarrow x^2 - 1 = 0 \;\; or \;\; x^2 + 1 = 0$

$\Rightarrow x^2 = 1 \quad$ or $\quad x^2 = -1$

$\Rightarrow x = \pm\sqrt{1} \quad$ or $\quad x = \pm\sqrt{-1}$

$\Rightarrow x = \pm 1 \quad$ or $\quad x = \pm i$

$\therefore$ four fourth roots of unity are: $1, -1, i, -i$

Properties of four fourth roots of unity

We have found that four fourth root of are: $1, -1, i, -i$.

(i) Sum of all the four fourth root of unity is zero. i.e., $1 + (-1) + i + (-i) = 0$

(ii) Both the real four fourth roots of unity are additive inverse of each other. -1 and 1 are the real fourth root of unity and $1 + (-1) = 0 = (-1) + 1$

(iii) Both the imaginary fourth roots of unity are conjugate of each other. *i* and *-i* are fourth roots of unity, which are obviously conjugate of each other.

(iv) Product of all the fourth roots of unity is -1. i.e., $1 \times (-1) \times i \times (-i) = -1$

Example 11: Prove that:

$x^3 + y^3 = (x + y)(x + \omega y)(x + \omega^2 y)$ **11301040**

Solution:

$$\text{R.H.S} = (x + y)(x + \omega y)(x + \omega^2 y)$$

$$= (x + y)\left[x + (\omega + \omega^2) yx + \omega^3 y^2\right]$$

$$\{\because \omega^3 = 1, \omega + \omega^2 = -1\}$$

$$= (x + y)(x^2 - xy + y^2)$$

$$= x^3 + y^3 = \text{L.H.S}$$

Hence proved.

EXERCISE 1.4

Q.1 Find the three cube roots of: **11301041**

(i) 8

Solution:

Let x be a cube root of 8.

Then $x = (8)^{\frac{1}{3}}$

Taking cube on both sides, we get:

$x^3 = 8$

$\Rightarrow x^3 - 8 = 0$

$\Rightarrow (x)^3 - (2)^3 = 0$

$\Rightarrow (x - 2)(x^2 + 2x + 4) = 0$

$\Rightarrow x - 2 = 0 \quad$ or $\quad x^2 + 2x + 4 = 0$

$\Rightarrow x = 2$

Now, $x^2 + 2x + 4 = 0$

Here $a = 1, b = 2, c = 4$

Using quadratic formula i.e.

$$x = \frac{-b \pm \sqrt{b^2 - 4ac}}{2a}$$

$$x = \frac{-2 \pm \sqrt{(2)^2 - 4(1)(4)}}{2(1)}$$

$$x = \frac{-2 \pm \sqrt{4 - 16}}{2}$$

$$x = \frac{-2 \pm \sqrt{-12}}{2}$$

$$x=\frac{-2\pm 2i\sqrt{3}}{2}$$

$$x=\frac{2\left(-1\pm i\sqrt{3}\right)}{2}$$

$$x=2\left(\frac{-1+i\sqrt{3}}{2}\right),2\left(\frac{-1-i\sqrt{3}}{2}\right)$$

$$x=2\omega,2\omega^2$$

$\therefore$ Three cube roots of 8 are $\{2,2\omega,2\omega^2\}$.

(ii) –8

Solution:

Let x be a cube root of –8.

Then $x=(-8)^{\frac{1}{3}}$

Taking cube on both sides we get

$x^3=-8$

$\Rightarrow x^3+8=0$

$\Rightarrow (x)^3+(2)^3=0$

$\Rightarrow (x+2)(x^2-2x+4)=0$

$\Rightarrow x+2=0$ or $x^2-2x+4=0$

$\Rightarrow x=-2$

$x^2-2x+4=0$

Here $a=1,b=-2,c=4$

Using quadratic formula i.e.

$$x=\frac{-b\pm\sqrt{b^2-4ac}}{2a}$$

$$x=\frac{-(-2)\pm\sqrt{(-2)^2-4(1)(4)}}{2(1)}$$

$$x=\frac{2\pm\sqrt{4-16}}{2}$$

$$x=\frac{2\pm\sqrt{-12}}{2}$$

$$x=\frac{2\pm 2i\sqrt{3}}{2}$$

$$x=\frac{2\left(1\pm i\sqrt{3}\right)}{2}$$

$$x=2\left(\frac{1+i\sqrt{3}}{2}\right),2\left(\frac{1-i\sqrt{3}}{2}\right)$$

$$x=-2\left(\frac{-1-i\sqrt{3}}{2}\right),-2\left(\frac{-1+i\sqrt{3}}{2}\right)$$

$$x=-2\omega^2,-2\omega$$

$\therefore$ Three cube roots of –8 are $\{-2,-2\omega,-2\omega^2\}$.

(iii) –27

Solution:

Let x be a cube root of –27.

Then $x=(-27)^{\frac{1}{3}}$

Taking cube on both sides, we get

$x^3=-27$

$\Rightarrow x^3+27=0$

$\Rightarrow (x)^3+(3)^3=0$

$\Rightarrow (x+3)(x^2-3x+9)=0$

$\Rightarrow x+3=0$ or $x^2-3x+9=0$

$\Rightarrow x=-3$

$x^2-3x+9=0$

Here $a=1,b=-3,c=9$

Using quadratic formula i.e.

$$x=\frac{-b\pm\sqrt{b^2-4ac}}{2a}$$

$$x=\frac{-(-3)\pm\sqrt{(-3)^2-4(1)(9)}}{2(1)}$$

$$x=\frac{3\pm\sqrt{9-36}}{2}$$

$$x=\frac{3\pm\sqrt{-27}}{2}$$

$$x=\frac{3\pm 3i\sqrt{3}}{2}$$

$$x=\frac{3\left(1\pm i\sqrt{3}\right)}{2}$$

$x=3\left(\frac{1+i\sqrt{3}}{2}\right),3\left(\frac{1-i\sqrt{3}}{2}\right)$

$x=-3\left(\frac{-1-i\sqrt{3}}{2}\right),-3\left(\frac{-1+i\sqrt{3}}{2}\right)$

$x=-3\omega^2,-3\omega$

$\therefore$ Three cube roots of -27 are $\{-3,-3\omega,-3\omega^2\}$.

(iv) 64

Solution:

Let x be a cube root of 64.

Than $x=(64)^{\frac{1}{3}}$

Taking cube on both sides we get

$x^3=64$

$\Rightarrow x^3-64=0$

$\Rightarrow (x)^3-(4)^3=0$

$\Rightarrow (x-4)(x^2+4x+16)=0$

$\Rightarrow x-4=0$ or $x^2+4x+16=0$

$\Rightarrow x=4$

$x^2+4x+16=0$

Here $a=1,b=4,c=16$

Using quadratic formula i.e.

$x=\frac{-b\pm\sqrt{b^2-4ac}}{2a}$

$x=\frac{-4\pm\sqrt{(4)^2-4(1)(16)}}{2(1)}$

$x=\frac{-4\pm\sqrt{16-64}}{2}$

$x=\frac{-4\pm\sqrt{-48}}{2}$

$x=\frac{-4\pm 4i\sqrt{3}}{2}$

$x=\frac{4(-1\pm i\sqrt{3})}{2}$

$x=4\left(\frac{-1+i\sqrt{3}}{2}\right),4\left(\frac{-1-i\sqrt{3}}{2}\right)$

$x=4\omega,4\omega^2$

$\therefore$ Three cube roots of 64 are $\{4,4\omega,4\omega^2\}$.

(v) -125

Solution:

Let x be a cube root of -125.

Then $x=(-125)^{\frac{1}{3}}$

Taking cube on both sides, we get

$x^3=-125$

$x^3+125=0$

$(x)^3+(5)^3=0$

$(x+5)(x^2-5x+25)=0$

$\Rightarrow x+5=0$ or $x^2-5x+25=0$

$\Rightarrow x=-5$

$x^2-5x+25=0$

Here $a=1,b=-5,c=25$

Using quadratic formula i.e.

$x=\frac{-b\pm\sqrt{b^2-4ac}}{2a}$

$x=\frac{-(-5)\pm\sqrt{(-5)^2-4(1)(25)}}{2(1)}$

$x=\frac{5\pm\sqrt{25-100}}{2}$

$x=\frac{5\pm\sqrt{-75}}{2}$

$x=\frac{5\pm 5i\sqrt{3}}{2}$

$x=\frac{5(1\pm i\sqrt{3})}{2}$

$x=5\left(\frac{1+i\sqrt{3}}{2}\right),5\left(\frac{1-i\sqrt{3}}{2}\right)$

$x=-5\left(\frac{-1-i\sqrt{3}}{2}\right),-5\left(\frac{-1+i\sqrt{3}}{2}\right)$

$x=-5\omega^2,-5\omega$

$\therefore$ Three cube roots of 125 are $\{-5,-5\omega,-5\omega^2\}$.

Q.2 Find the four fourth roots of 16,81,625. Also show that their sum is zero in each case. **11301042**

Solution:

(i) 16

Let x be a fourth root of 16.

Then $x=(16)^{\frac{1}{4}}$

$\Rightarrow x^4=16$

$\Rightarrow x^4-16=0$

$\Rightarrow (x^2)^2-(4)^2=0$

$\Rightarrow (x^2-4)(x^2+4)=0$

$\Rightarrow x^2-4=0$ or $x^2+4=0$

$\Rightarrow x^2=4$ or $x^2=-4$

$\Rightarrow x=\pm\sqrt{4}$ or $x=\pm\sqrt{-4}$

$\Rightarrow x=\pm 2$ or $x=\pm 2i$

$\therefore$ Four fourth roots of 16 are $2,-2,2i,-2i$.

Sum $=2-2+2i-2i=0$

(ii) 81

Let x be a fourth root of 81.

Then $x=(81)^{\frac{1}{4}}$

$\Rightarrow x^4=81$

$\Rightarrow x^4-81=0$

$\Rightarrow (x^2)^2-(9)^2=0$

$\Rightarrow (x^2-9)(x^2+9)=0$

$\Rightarrow x^2-9=0$ or $x^2+9=0$

$\Rightarrow x^2=9$ or $x^2=-9$

$\Rightarrow x=\pm\sqrt{9}$ or $x=\pm\sqrt{9}$

$\Rightarrow x=\pm 3$ or $x=\pm 3i$

$\therefore$ Four fourth roots of 81 are $3,-3,3i,-3i$

Sum $=3-3+3i-3i=0$

(iii)625

Let x be a fourth root of 625.

Then $x=(625)^{\frac{1}{4}}$

$\Rightarrow x^4=625$

$\Rightarrow x^4-625=0$

$\Rightarrow (x^2)^2-(25)^2=0$

$\Rightarrow (x^2-25)(x^2+25)=0$

$\Rightarrow x^2-25=0$ or $x^2+25=0$

$\Rightarrow x^2=25$ or $x^2=-25$

$\Rightarrow x=\pm\sqrt{25}$ or $x=\pm\sqrt{-25}$

$\Rightarrow x=\pm 5$ or $x=\pm 5i$

$\therefore$ Four fourth roots of 625 are $5,-5,5i,-5i$.

Sum $=5-5+5i-5i=0$

Q.3 If $1,\omega,\omega^2$ are the cube roots of unity, show that $1+\omega^n+\omega^{2n}=3$ where *n* is a multiple of 3 respectively. **11301043**

Solution:

$\because 1,\omega,\omega^2$ are the cube roots of unity.

$\therefore \omega^3=1$

$\because n$ is a multiple of 3

$\therefore n=3k$ where k is an integer

To show that $1+\omega^n+\omega^{2n}=3$

L.H.S.

$=1+\omega^n+\omega^{2n}$

$=1+\omega^{3k}+\omega^{2(3k)}$

$=1+\omega^{3k}+\omega^{6k}$

$=1+(\omega^3)^k+(\omega^3)^{2k}$

$=1+(1)^k+(1)^{2k}$

$=1+1+1=3=\text{R.H.S}$

Hence proved.

Q.4 Evaluate: **11301044**

(i) $\left(\frac{-1+\sqrt{-3}}{2}\right)^7+\left(\frac{-1-\sqrt{-3}}{2}\right)^7$

Solution:

$$\left(\frac{-1+\sqrt{-3}}{2}\right)^7+\left(\frac{-1-\sqrt{-3}}{2}\right)^7$$
$$=\omega^7+\left(\omega^2\right)^7$$
$$=\omega^7+\omega^{14}$$
$$=\omega^6\cdot\omega+\omega^{12}\cdot\omega^2$$
$$=\left(\omega^3\right)^2\cdot\omega+\left(\omega^3\right)^4\cdot\omega^2$$
$$=(1)^2\cdot\omega+(1)^4\cdot\omega^2 \qquad \because \omega^3=1$$
$$=\omega+\omega^2=-1 \qquad \because 1+\omega+\omega^2=0$$

(ii) $\left(-1+\sqrt{-3}\right)^5+\left(-1-\sqrt{-3}\right)^5$

Solution:

$$\left(-1+\sqrt{-3}\right)^5+\left(-1-\sqrt{-3}\right)^5=(2\omega)^5+\left(2\omega^2\right)^5$$
$$\because \omega=\frac{-1+\sqrt{-3}}{2} \text{ and } \omega^2=\frac{-1-\sqrt{-3}}{2}$$
$$=2^5\omega^5+2^5\left(\omega^2\right)^5$$
$$=32\omega^5+32\omega^{10}$$
$$=32\omega^3\cdot\omega^2+32\left(\omega^3\right)^3\cdot\omega$$
$$=32.1\cdot\omega^2+32(1)^3\cdot\omega \qquad \because \omega^3=1$$
$$=32\omega^2+32\omega$$
$$=32\left(\omega^2+\omega\right)$$
$$=32(-1) \qquad \because 1+\omega+\omega^2=0$$
$$=-32$$

Q.5 Show that $\left(1-\omega+\omega^2\right)\left(1-\omega^2+\omega^4\right)\left(1-\omega^4+\omega^8\right)\left(1-\omega^8+\omega^{16}\right)\ldots$ **to** $2n$ **factors** $=2^{2n}$. **11301045**

Solution:

L.H.S. $=\left(1-\omega+\omega^2\right)\left(1-\omega^2+\omega^4\right)\left(1-\omega^4+\omega^8\right)\left(1-\omega^8+\omega^{16}\right)\ldots 2n$ factors

$$=\left(1-\omega+\omega^2\right)\left(1-\omega^2+\omega^3.\omega\right)\left(1-\omega^3.\omega+\left(\omega^3\right)^2.\omega^2\right)\left(1-\left(-\omega^3\right)^2.\omega^2+\left(\omega^3\right)^5.\omega\right)\ldots 2n \text{ factors}$$
$$=\left(1-\omega+\omega^2\right)\left(1-\omega^2+\omega\right)\left(1-\omega+\omega^2\right)\left(1-\omega^2+\omega\right)\ldots 2n \text{ factors } \because \omega^3=1$$
$$=\left(1+\omega^2-\omega\right)\left(1+\omega-\omega^2\right)\left(1+\omega^2-\omega\right)\left(1+\omega-\omega^2\right)\ldots 2n \text{ factors}$$
$$=(-\omega-\omega)\left(-\omega^2-\omega^2\right)(-\omega-\omega)\left(-\omega^2-\omega^2\right)\ldots 2n \text{ factors} \qquad \because 1+\omega+\omega^2=0$$
$$=(-2\omega)\left(-2\omega^2\right)(-2\omega)\left(-2\omega^2\right)\ldots 2n \text{ factors}$$
$$=(-2)^{2n}\left\{(\omega)\left(\omega^2\right)(\omega)\left(\omega^2\right)\ldots 2n \text{ factors}\right\}$$
$$=(-2)^{2n}\left\{\left(\omega^3\right)\left(\omega^3\right)\ldots n \text{ factors}\right\}$$
$$=(-2)^{2n}\{(1)(1)\ldots n \text{ factors}\}$$
$$=(-2)^{2n}(1)^n=(-2)^{2n}\times 1$$
$$=(-2)^{2n}=2^{2n} \quad \because 2n \text{ is an even integer.}$$

Hence proved.

Q.6 Prove that $\left(\frac{i+\sqrt{3}}{2}\right)^8+\left(\frac{i-\sqrt{3}}{2}\right)^8=-1$ **11301046**

Solution:

$$\because \omega=\frac{-1+i\sqrt{3}}{2} \text{ and } \omega^2=\frac{-1-i\sqrt{3}}{2}$$
$$\therefore -\omega=\frac{1-i\sqrt{3}}{2} \text{ and } -\omega^2=\frac{1+i\sqrt{3}}{2}$$
$$-i\omega=i\left(\frac{1-i\sqrt{3}}{2}\right) \text{ and } -i\omega^2=i\left(\frac{1+i\sqrt{3}}{2}\right)$$
$$\Rightarrow -i\omega=\frac{i-i^2\sqrt{3}}{2} \text{ and } -i\omega^2=\frac{i+i^2\sqrt{3}}{2}$$
$$\Rightarrow -i\omega=\frac{i-(-1)\sqrt{3}}{2} \text{ and } -i\omega^2=\frac{i+(-1)\sqrt{3}}{2}$$
$$\Rightarrow -i\omega=\frac{i+1\sqrt{3}}{2} \text{ and } \Rightarrow -i\omega^2=\frac{i-\sqrt{3}}{2}$$
$$\therefore \textbf{L.H.S.}=\left(\frac{i+\sqrt{3}}{2}\right)^8+\left(\frac{i-\sqrt{3}}{2}\right)^8$$

$$= (-i\omega)^8 + (-i\omega^2)^8$$
$$= (-i)^8(\omega)^8 + (-i)^8(\omega^2)^8$$
$$= i^8\omega^8 + i^8\omega^{16}$$
$$= (i^2)^4(\omega^3)^2\omega^2 + (i^2)^4(\omega^3)^5\omega$$
$$= (-1)^4(1)^2\omega^2 + (-1)^4(1)^5\omega$$
$$\because i^2 = -1 \text{ and } \omega^3 = 1$$
$$= \omega^2 + \omega = -1 \quad \because 1 + \omega + \omega^2 = 0$$
$$= \text{R.H.S.}$$

Hence proved.

Q.7 Evaluate $\sum_{k=0}^{5} \omega^{2k}$ where ω is an imaginary cube root of unity. **11301047**

Solution:

$$\sum_{k=0}^{5} \omega^{2k} = \omega^{2(0)} + \omega^{2(1)} + \omega^{2(2)} + \omega^{2(3)} + \omega^{2(4)} + \omega^{2(5)}$$
$$= \omega^0 + \omega^2 + \omega^4 + \omega^6 + \omega^8 + \omega^{10}$$
$$= 1 + \omega^2 + \omega^3.\omega + (\omega^3)^2 + (\omega^3)^2.\omega^2 + (\omega^3)^3.\omega$$
$$= 1 + \omega^2 + \omega + 1 + \omega^2 + \omega \qquad \because \omega^3 = 1$$
$$= 2 + 2\omega + 2\omega^2$$
$$= 2 + 2(\omega + \omega^2)$$
$$= 2 + 2(-1) \qquad \because 1 + \omega + \omega^2 = 0$$
$$= 2 - 2 = 0$$

Q.8 If ω is an imaginary cube root of unity, prove that $\frac{a + b\omega^2 + c\omega}{a\omega^2 + b\omega + c} = \omega$. **11301048**

Solution:

Given that ω is an imaginary cube root of unity.

$\therefore \omega^3 = 1$

To prove that $\frac{a + b\omega^2 + c\omega}{a\omega^2 + b\omega + c} = \omega$

$$\text{L.H.S.} = \frac{a + b\omega^2 + c\omega}{a\omega^2 + b\omega + c}$$
$$= \frac{a\omega^3 + b\omega^2 + c\omega}{a\omega^2 + b\omega + c} \qquad \because \omega^3 = 1$$
$$= \frac{\omega(a\omega^2 + b\omega + c)}{a\omega^2 + b\omega + c} = \omega = \text{R.H.S}$$

Hence proved.

Q.9 If ω is cube root of unity, prove that $\frac{a\omega^{12} + b\omega^{17} + c\omega^{19}}{a\omega^{14} + b\omega^{22} + c\omega^{30}} = \omega$. **11301049**

Solution:

Given that ω is an imaginary cube root of unity.

$\therefore \omega^3 = 1$

To prove that $\frac{a\omega^{12} + b\omega^{17} + c\omega^{19}}{a\omega^{14} + b\omega^{22} + c\omega^{30}} = \omega$

$$\text{L.H.S.} = \frac{a\omega^{12} + b\omega^{17} + c\omega^{19}}{a\omega^{14} + b\omega^{22} + c\omega^{30}}$$
$$= \frac{a(\omega^3)^4 + b(\omega^3)^5.\omega^2 + c(\omega^3)^6.\omega}{a(\omega^3)^4.\omega^2 + b(\omega^3)^7.\omega + c(\omega^3)^{10}}$$
$$= \frac{a + b\omega^2 + c\omega}{a\omega^2 + b\omega + c} \qquad \because \omega^3 = 1$$
$$= \frac{a\omega^3 + b\omega^2 + c\omega}{a\omega^2 + b\omega + c}$$
$$= \frac{\omega(a\omega^2 + b\omega + c)}{a\omega^2 + b\omega + c} = \omega = R.H.S$$

Hence proved.

Polar Coordinates system

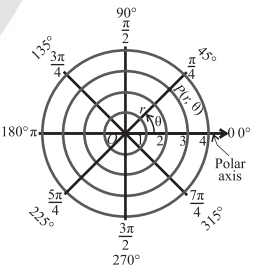

Polar coordinates are often more convenient than Cartesian coordinates in situations involving circular or rotational symmetry, or when problem depends on distance from a fixed point and angle relative to a reference direction. Just as the Cartesian coordinates system uses an ordered pair (x, y) to describe the position of a point, the polar coordinate system determines the position of a point using a directed distance r from a fixed origin O (called the pole) and an angle θ that the line connecting the origin to the

point makes with the polar axis (typically aligned with the positive x-axis).

Complex numbers can be expressed as Cartesian coordinates (x, y) as well as in polar coordinates (r, θ).

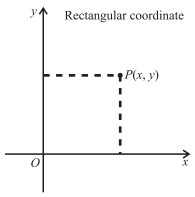

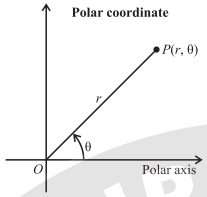

While r is typically considered non-negative $(r \geq 0)$, it is also possible for r to be negative $(r < 0)$. The value of r changes depending on its sign, and it affects the position of the point P in the plane.

When $r > 0$, the angle θ is the measure of any angle in standard position whose terminal side lies along the line connecting the origin to the point P measured from the polar axis (positive x-axis).

When $r < 0$, the angle θ is the measure of any angle in standard position whose terminal side lies along the line connecting the origin to the point Q, but the point Q is located $|r|$ units in the opposite direction $(i.e. \pi + \theta)$ measured from the polar axis (positive x-axis) as shown in the figure below.

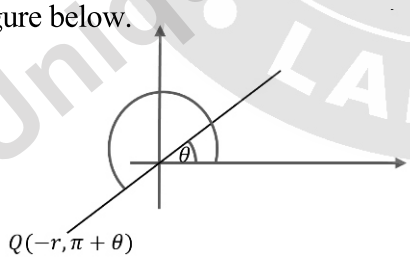

The polar form of a complex number:

Consider the complex number $z = x + iy = (x, y)$

In the right triangle OQP:

$\cos\theta = \dfrac{x}{r} \Rightarrow x = r\cos\theta$

$\sin\theta = \dfrac{y}{r} \Rightarrow y = r\sin\theta$

$\therefore\ z = x + iy = r\cos\theta + ir\sin\theta$

$= r(\cos\theta + i\sin\theta) = rCis\theta$

Which is called polar form of the complex number z.

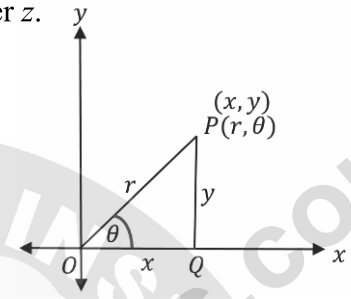

Where $r = |z| = \sqrt{x^2 + y^2}$

And $\theta = \tan^{-1}\left(\dfrac{y}{x}\right)$

Example 12: Express the complex number $1 + i\sqrt{3}$ in polar form. **11301050**

Solution:

Step –I: Put $r\cos\theta = 1$ and $r\cos\theta = \sqrt{3}$

Step – II: $r^2 = (1)^2 + (\sqrt{3})^2$

$\Rightarrow r^2 = 1 + 3 = 4$

$\Rightarrow r = 2$

Step – III: $\theta = \tan^{-1}\dfrac{\sqrt{3}}{1}$

$= \tan^{-1}\sqrt{3}$

$= 60°$

Thus $1 + i\sqrt{3} = 2\cos 60° + i2\sin 60°$

Note:

- If $x = 0, y > 0$ then $\theta = 90°$.
- If $x = 0, y < 0$ then $\theta = -90°$.
- If $x = 0, y = 0$ then θ is undefined.
- If $y = 0, x > 0$ then $\theta = 0°$.
- If $y = 0, x < 0$ then $\theta = 180°$.

Principal argument

The principal argument of the complex number $z = x + iy$ is the angle between the positive real axis and the line joining the point (x, y) to the origin in the Argand plane.

Principal argument of z is denoted by:

Arg (z) $= \theta \in [-\pi, \pi)$

In **1st** quadrant: $\theta = \tan^{-1}\left(\frac{y}{x}\right)$

In **2nd** quadrant: $\theta = \pi - \tan^{-1}\left|\frac{y}{x}\right|$

In **3rd** quadrant:

$\theta = \pi + \tan^{-1}\left|\frac{y}{x}\right|$ or $-\left(\pi - \tan^{-1}\left|\frac{y}{x}\right|\right)$

In **4th** quadrant:

$\theta = 2\pi - \tan^{-1}\left|\frac{y}{x}\right|$ or $-\tan^{-1}\left|\frac{y}{x}\right|$

Operations on complex numbers in polar form

Addition and subtraction of complex number in polar form

If $z_1 = r_1(\cos\theta_1 + i\sin\theta_1), z_2 = r_2(\cos\theta_2 + i\sin\theta_2)$ be two complex numbers in polar form the addition and subtraction of these numbers can be computed simply as:

$$z_1 + z_2 = r_1(\cos\theta_1 + i\sin\theta_1) + r_2(\cos\theta_2 + i\sin\theta_2)$$

$$z_1 - z_2 = r_1(\cos\theta_1 + i\sin\theta_1) - r_2(\cos\theta_2 + i\sin\theta_2)$$

Multiplication of complex number in polar form

If $z_1 = r_1(\cos\theta_1 + i\sin\theta_1)$ and $z_2 = r_2(\cos\theta_2 + i\sin\theta_2)$, then $z_1 z_2 = r_1 r_2[\cos(\theta_1 + \theta_2) + i\sin(\theta_1 + \theta_2)]$

Example 13: Find the product of $5\left(\cos\frac{\pi}{6} + i\sin\frac{\pi}{6}\right)$ **and** $4\left(\cos\frac{3\pi}{2} + i\sin\frac{3\pi}{2}\right)$. **11301051**

Solution: Let $z_1 = 5\left(\cos\frac{\pi}{6} + i\sin\frac{\pi}{6}\right)$ and

$z_2 = 4\left(\cos\frac{3\pi}{2} + i\sin\frac{3\pi}{2}\right)$

Here, $r_1 = 5$ and $\theta_1 = \frac{\pi}{6}$, while $r_2 = 4$ and $\theta_2 = \frac{3\pi}{2}$

Substitute this value in the product formula

$$z_1 \cdot z_2 = r_1 \cdot r_2[\cos(\theta_1 + \theta_2) + i\sin(\theta_1 + \theta_2)$$

$$= 5 \times 4\left[\cos\left(\frac{\pi}{6} + \frac{3\pi}{2}\right) + i\sin\left(\frac{\pi}{6} + \frac{3\pi}{2}\right)\right]$$

$$= 20\left(\cos\frac{5\pi}{3} + i\sin\frac{5\pi}{3}\right)$$

Thus, the required product is $20\left(\cos\frac{5\pi}{3} + i\sin\frac{5\pi}{3}\right)$.

Division of complex number in polar form

If $z_1 = r_1(\cos\theta_1 + i\sin\theta_1)$ and $z_2 = r_2(\cos\theta_2 + i\sin\theta_2)$, then

$$\frac{z_1}{z_2} = \frac{r_1}{r_2}[\cos(\theta_1 - \theta_2) + i\sin(\theta_1 - \theta_2)]$$

Example 14: Divide $\frac{2}{7}\left(\cos\frac{7\pi}{6} + i\sin\frac{7\pi}{6}\right)$ **by** $\frac{3}{5}\left(\cos\left(-\frac{\pi}{2}\right) + i\sin\left(-\frac{\pi}{2}\right)\right)$. **11301052**

Solution:

Let $z_1 = \frac{2}{7}\left(\cos\frac{7\pi}{6} + i\sin\frac{7\pi}{6}\right)$

and $z_2 = \frac{3}{5}\left(\cos\left(-\frac{\pi}{2}\right) + i\sin\left(-\frac{\pi}{2}\right)\right)$

Here, $r_1 = \frac{2}{7}, \theta_1 = \frac{7\pi}{6}, r_2 = \frac{3}{5}$ and $\theta_2 = -\frac{\pi}{2}$.

Substitute value in the quotient formula

$$\frac{z_1}{z_2}=\frac{r_1}{r_2}\left[\cos(\theta_1-\theta_2)+i\sin(\theta_1-\theta_2)\right]$$

$$=\frac{2}{7}\times\frac{5}{3}\left[\cos\left(\frac{7\pi}{6}-\left(-\frac{\pi}{2}\right)\right)+i\sin\left(\frac{7\pi}{6}-\left(-\frac{\pi}{2}\right)\right)\right]$$

$\frac{z_1}{z_2}=\frac{10}{21}\left(\cos\frac{5\pi}{3}+i\sin\frac{5\pi}{3}\right)$ is the required polar form of division of two complex number.

Example 15: If $z=x+iy$, then write the equation $|3z-i|=|3\bar{z}+7|$ in term of x and y. **11301053**

Solution:

Given $|3z-i|=|3\bar{z}+7|$ ...(i)

$$|3z-i|=|3(x+iy)-i|$$
$$=|3x+i(3y-1)|$$
$$=\sqrt{(3x)^2+(3y-1)^2}$$
$$|3\bar{z}+7|=|\overline{3x+3iy}+7|$$
$$=|3x-3iy+7|$$
$$=|3x+7+i(-3y)|$$
$$=\sqrt{(3x+7)^2+(-3y)^2}$$

Substitutes these values in (i)

$$\sqrt{(3x)^2+(3y-1)^2}=\sqrt{(3x+7)^2+(-3y)^2}$$

Taking square on both sides

$$(3x)^2+(3y-1)^2=(3x+7)^2+(-3y)^2$$
$$9x^2+9y^2-6y+1=9x^2+42x+49+9y^2$$
$$-6y+1=42x+49$$
$$-6y=42x+48$$

or $y=-7x-8$

The equation $y=-7x-8$ represents a straight line in the complex plane.

Example 16: Show that $(x+2)^2+y^2=8$ if $\arg\left(\frac{z+2i}{z-2i}\right)=\frac{3\pi}{4}$ for $z=x+iy$. **11301054**

Solution:

$$\frac{z+2i}{z-2i}=\frac{x+iy+2i}{x+iy-2i}$$

$$\frac{z+2i}{z-2i}=\frac{x+i(y+2)}{x+i(y-2)}$$

$$\frac{z+2i}{z-2i}=\frac{x+i(y+2)}{x+i(y-2)}\times\frac{x-i(y-2)}{x-i(y-2)}$$

$$\Rightarrow\frac{z+2i}{z-2i}=\frac{(x^2+y^2-4)+4ix}{x^2+(y-2)^2}$$

$$=\frac{x^2+y^2-4}{x^2+(y-2)^2}+i\frac{4x}{x^2+(y-2)^2}$$

As $\arg\left(\frac{z+2i}{z-2i}\right)=\frac{3\pi}{4}$

$$\Rightarrow\tan^{-1}\left(\frac{\frac{4x}{x^2+(y-2)^2}}{\frac{x^2+y^2-4}{x^2+(y-2)^2}}\right)=\frac{3\pi}{4}$$

$$\Rightarrow\frac{4x}{x^2+y^2-4}=\tan\frac{3\pi}{4}$$

$$\Rightarrow\frac{4x}{x^2+y^2-4}=-1$$

$$\Rightarrow 4x=-1(x^2+y^2-4)$$

$$\Rightarrow x^2+4x+y^2=4$$

Completing the square for x^2, we have

$$(x+2)^2+y^2=8$$

Complex numbers in the real world

Voltage, Current and Resistance

Ohm's Law is a fundamental principle in physics that describes the relationship between voltage V, current I and resistance R in an electrical circuit. Mathematically Ohm's Law can be expressed by the formula $V=IR$.

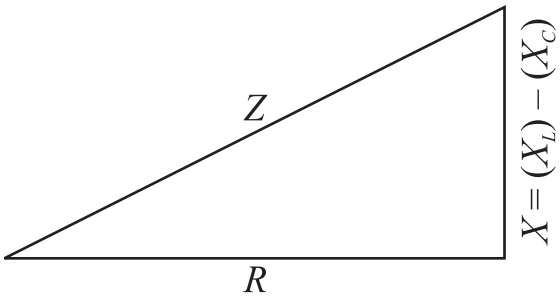

When dealing with alternating current (AC) circuits, resistance generalizes to impedance (Z). Resistance in a circuit is due to inductor (X_L) and capacitor (X_C). Their difference is reactance $X=(X_L)-(X_C)$.

Geometrically it is shown in the adjacent figure. Here $Z=R+iX$.

Then for AC circuits, Ohm's Law in Terms of impedance is expressed by the formula $V=I.Z$.

Example 17: If the impedance of circuit is $11(\cos 55.35°+i\sin 55.35°)$ ohms at a voltage of $25(\cos 30°+i\sin 30°)$ V, find the value of current in the circuit. **11301055**

Solution: Substitute the voltage $25(\cos 30°+i\sin 30°)$ and impedance $11(\cos 55.35°+i\sin 55.35°)$ into the equation $V=IZ$, where V is voltage, I denote the current and Z is impedance.

$$25(\cos 30°+i\sin 30°)=I.11(\cos 55.35°+i\sin 55.35°)$$

$$\text{or } I=\frac{25(\cos 30°+i\sin 30°)}{11(\cos 55.35°+i\sin 55.35°)}$$

$$I=\frac{25}{11}\left[\cos(30°-55.35°)+i\sin(30°-55.35°)\right.$$

$$I=2.27\left[\cos(-25.35°)+i\sin(-25.35°)\right]$$

Express into rectangular form

$$I=2.27\left[0.90+i(-0.42)\right]=2.04-0.95i$$

Thus, current is $2.04-0.95iA$.

Cryptography

It is the science of securing information by transforming readable messages called plaintext into secrete code called ciphertext using mathematical algorithms and encryption keys. It consists of two main processes i.e., encryption to lock message with complex with, and decryption to unlock it with the right key.

Example 18: The word "MATH" is to be encrypted by multiplying a complex number $k=2+3i$ and then decrypted back to its original form using the concept of multiplicative inverse in complex numbers.

Each letter of the alphabet is assigned a numerical value as follows:

$A=1, B=2, C=3, ..., Z=26$ **11301056**

Solution: First, we assign each letter in the word "MATH" a complex number with zero imaginary part. The encryption and decryption shown in the table below

Letter	Complex Number (z)	z encrypted $=z\times k$	z decrypted $=z$ encrypted $/\ k$	Letter
M	$13+0i$	$(13+0i)(2+3i)=26+39i$	$(26+39i)/(2+3i)=13+0i$	M
A	$1+0i$	$(1+0i)(2+3i)=2+3i$	$(2+3i)/(2+3i)=1+0i$	A
T	$20+0i$	$(20+0i)(2+3i)=40+60i$	$(40+60i)/2+3i=20+0i$	T
H	$8+0i$	$(8+0i)(2+3i)=16+24i$	$16+24i/2+3i=8+0i$	H

EXERCISE 1.5

Q.1 Plot the following points: 11301057

(i) $(2, 75°)$

Solution:

$(2, 75°)$

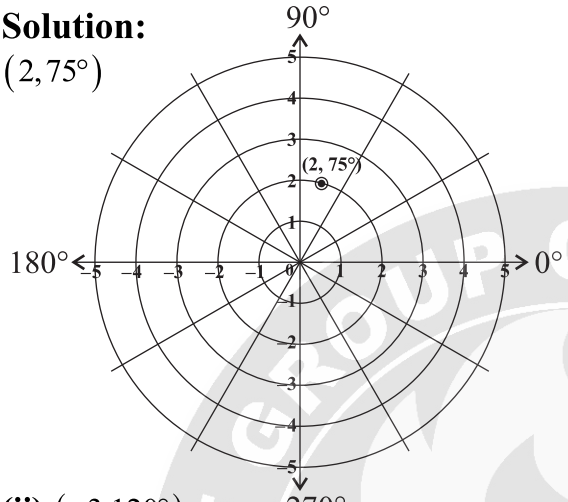

(ii) $(-3, 120°)$

Solution:

$(-3, 120°)$

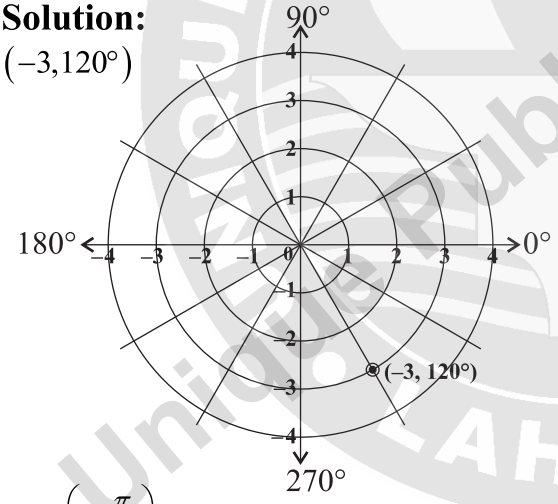

(iii) $\left(2, \frac{\pi}{6}\right)$

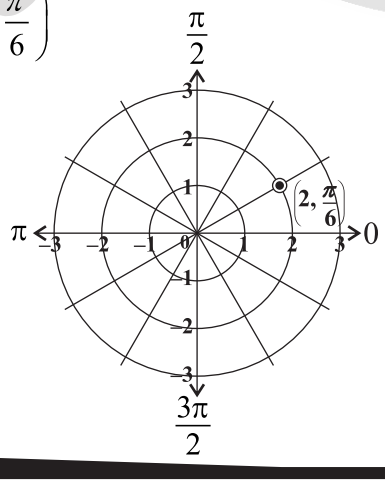

(iv) $\left(5, \frac{5\pi}{6}\right)$

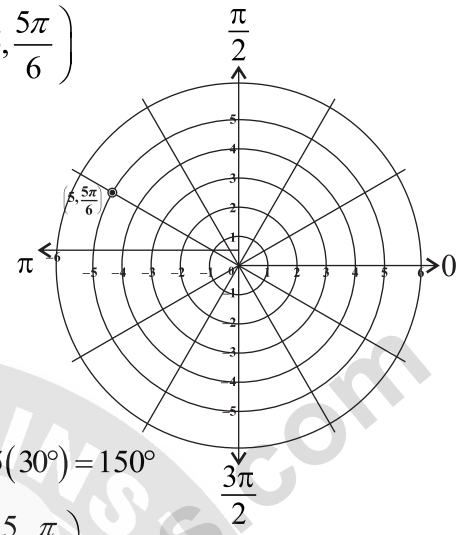

$5\frac{\pi}{6} = 5(30°) = 150°$

(v) $\left(-\frac{5}{2}, \frac{\pi}{3}\right)$

Solution:

$\left(-\frac{5}{2}, \frac{\pi}{3}\right)$

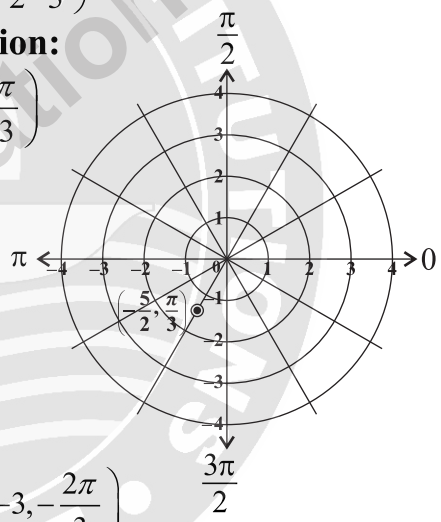

(vi) $\left(-3, -\frac{2\pi}{3}\right)$

Solution:

$-2\left(\frac{\pi}{3}\right) = -2(60) = -120°$

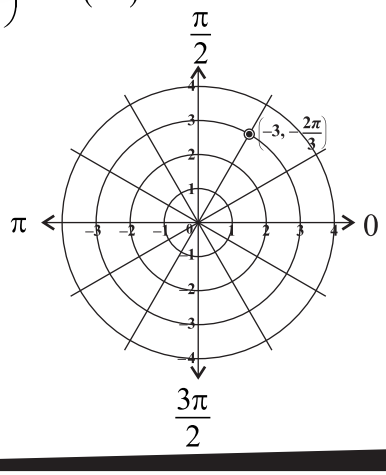

(vii) $\left(-\frac{9}{2}, -\frac{19\pi}{12}\right)$

Solution:

$-19\left(\frac{\pi}{2}\right) = -19(90°) = 1710°$

$\Rightarrow -4(\text{rev}) - 270° = -1710°$

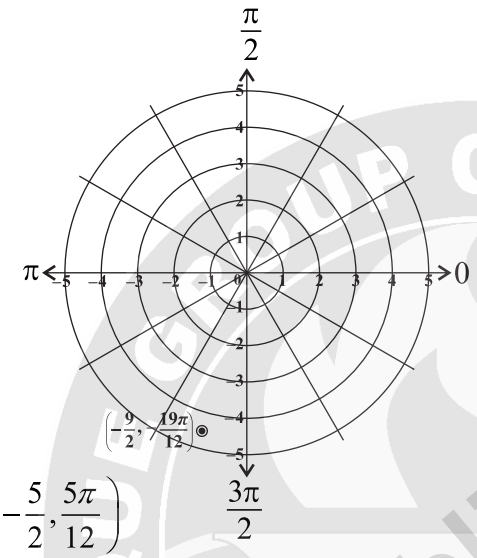

(viii) $\left(-\frac{5}{2}, \frac{5\pi}{12}\right)$

Solution:

$\frac{5\pi}{12} = 5\left(\frac{180}{12}\right) = 75°$

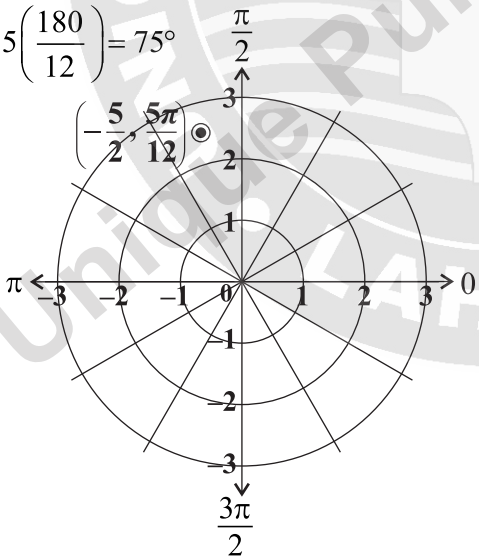

Q.2 Express the following complex numbers in polar form: **11301058**

(i) $4+3i$

Solution:

Let $z = z + iy = 4+3i$

$\Rightarrow x = 4, y = 3$

Then,

$r = |z| = \sqrt{x^2+y^2}$

$= \sqrt{4^2+3^2}$

$= \sqrt{16+9}$

$= \sqrt{25} = 5$

$\because$ Both x and y are positive.

$\therefore$ θ lies in 1st quadrant.

$\Rightarrow \theta = \tan^{-1}\left(\frac{y}{x}\right)$

$= \tan^{-1}\left(\frac{3}{4}\right) = 36.87°$

Polar form:

$z = r(\cos\theta + i\sin\theta)$

$= 5(\cos 36.87° + i\sin 36.87°)$

(ii) $1+i$

Solution:

Let $z = x+iy = 1+i$

$\Rightarrow x = 1, y = 1$

Then,

$r = |z| = \sqrt{x^2+y^2}$

$= \sqrt{1^2+1^2}$

$= \sqrt{1+1} = \sqrt{2}$

$\because$ Both x and y are positive.

$\therefore$ θ lies in 1st quadrant.

$\Rightarrow \theta = \tan^{-1}\left(\frac{y}{x}\right)$

$= \tan^{-1}\left(\frac{1}{1}\right)$

$= \tan^{-1}(1) = \frac{\pi}{4}$

Polar form:

$z = r(\cos\theta + i\sin\theta)$

$$= \sqrt{2}\left(\cos\frac{\pi}{4} + i\sin\frac{\pi}{4}\right)$$

(iii) $\frac{1}{2} + \frac{\sqrt{3}}{2}i$

Solution:

Let $z = z + iy = \frac{1}{2} + \frac{\sqrt{3}}{2}i$

$\Rightarrow x = \frac{1}{2}, y = \frac{\sqrt{3}}{2}$

Then,

$$r = |z| = \sqrt{x^2 + y^2}$$

$$= \sqrt{\left(\frac{1}{2}\right)^2 + \left(\frac{\sqrt{3}}{2}\right)^2}$$

$$= \sqrt{\frac{1}{4} + \frac{3}{4}}$$

$$= \sqrt{\frac{1+3}{4}}$$

$$= \sqrt{\frac{4}{4}} = \sqrt{1} = 1$$

$\because$ Both x and y are positive.

$\therefore$ θ lies in 1st quadrant.

$$\Rightarrow \theta = \tan^{-1}\left(\frac{y}{x}\right)$$

$$= \tan^{-1}\left(\frac{\frac{\sqrt{3}}{2}}{\frac{1}{2}}\right)$$

$$= \tan^{-1}\left(\sqrt{3}\right) = \frac{\pi}{3}$$

Polar form:

$$z = r\left(\cos\theta + i\sin\theta\right)$$

$$= 1\left(\cos\frac{\pi}{3} + i\sin\frac{\pi}{3}\right)$$

(iv) $-\frac{5}{2} - \frac{5\sqrt{3}}{2}i$

Solution:

Let $z = x + iy = -\frac{5}{2} - \frac{5\sqrt{3}}{2}i$

$\Rightarrow x = -\frac{5}{2}, y = -\frac{5\sqrt{3}}{2}$

Then,

$$r = |z| = \sqrt{x^2 + y^2}$$

$$r = \sqrt{\left(-\frac{5}{2}\right)^2 + \left(-\frac{5\sqrt{3}}{2}\right)^2}$$

$$r = \sqrt{\frac{25}{4} + \frac{75}{4}}$$

$$r = \sqrt{\frac{25+75}{4}}$$

$$r = \sqrt{\frac{100}{4}} = \sqrt{25} = 5$$

$\because$ Both x and y are negative.

$\therefore$ θ lies in 3rd quadrant.

$$\Rightarrow \theta = \pi + \tan^{-1}\left|\frac{y}{x}\right|$$

$$\Rightarrow \theta = \pi + \tan^{-1}\left|\frac{-\frac{5\sqrt{3}}{2}}{-\frac{5}{2}}\right|$$

$$\Rightarrow \theta = \pi + \tan^{-1}\left(\sqrt{3}\right)$$

$$\Rightarrow \theta = \pi + \frac{\pi}{3}$$

$$\Rightarrow \theta = \frac{3\pi + \pi}{3} = \frac{4\pi}{3}$$

Polar form:

$$z = r\left(\cos\theta + i\sin\theta\right)$$

$$= 5\left(\cos\frac{4\pi}{3} + i\sin\frac{4\pi}{3}\right)$$

(v) $\frac{1-i}{1+i}$

Solution:

$$\frac{1-i}{1+i}=\frac{1-i}{1+i}\times\frac{1-i}{1-i}$$
$$=\frac{(1-i)^2}{1^2-i^2}$$
$$=\frac{1+i^2-2i}{1^2-i^2}$$
$$=\frac{1+(-1)-2i}{1-(-1)}$$
$$=\frac{1-1-2i}{1+1}$$
$$=\frac{-2i}{2}$$
$$\Rightarrow \frac{1-i}{1+i}=-i$$

Let $z=x+iy=-i$

$\Rightarrow x=0, y=-1$

Then,

$$r=|z|=\sqrt{x^2+y^2}$$
$$=\sqrt{0^2+(-1)^2}$$
$$=\sqrt{0+1}=\sqrt{1}=1$$

$\because x=0, y=-1(-ve)$

$\therefore \theta=-\frac{\pi}{2}$

Polar form:

$$z=r(\cos\theta+i\sin\theta)$$
$$=1\left[\cos\left(-\frac{\pi}{2}\right)+i\sin\left(-\frac{\pi}{2}\right)\right]$$

(vi) $\frac{\sqrt{3}+i}{1+\sqrt{3}i}$

Solution:

$$\frac{\sqrt{3}+i}{1+\sqrt{3}i}=\frac{\sqrt{3}+i}{1+\sqrt{3}i}\times\frac{1-\sqrt{3}i}{1-\sqrt{3}i}$$
$$=\frac{\sqrt{3}-3i+i-\sqrt{3}i^2}{1^2-\left(\sqrt{3}i\right)^2}$$
$$=\frac{\sqrt{3}-3i+i-\sqrt{3}i^2}{1^2-\left(\sqrt{3}\right)^2 i^2}$$
$$=\frac{\sqrt{3}-2i-\sqrt{3}(-1)}{1-(3)(-1)}$$
$$=\frac{\sqrt{3}-2i+\sqrt{3}}{1+3}$$
$$=\frac{2\sqrt{3}-2i}{4}$$
$$=\frac{2\left(\sqrt{3}-i\right)}{4}$$
$$=\frac{\sqrt{3}-i}{2}=\frac{\sqrt{3}}{2}-\frac{1}{2}i$$

Let $z=x+iy=\frac{\sqrt{3}}{2}-\frac{1}{2}i$

$\Rightarrow x=\frac{\sqrt{3}}{2}, y=-\frac{1}{2}$

Then,

$$r=|z|=\sqrt{x^2+y^2}$$
$$=\sqrt{\left(\frac{\sqrt{3}}{2}\right)^2+\left(-\frac{1}{2}\right)^2}$$
$$=\sqrt{\frac{3}{4}+\frac{1}{4}}$$
$$=\sqrt{\frac{3+1}{4}}$$
$$=\sqrt{\frac{4}{4}}=\sqrt{1}=1$$

$\because x$ is positive and y is negative.

$\therefore \theta$ lies in 4th quadrant.

$$\theta=-\tan^{-1}\left|\frac{y}{x}\right|$$
$$=-\tan^{-1}\left|\frac{-\frac{1}{2}}{\frac{\sqrt{3}}{2}}\right|$$

$$= -\tan^{-1}\left|-\frac{1}{\sqrt{3}}\right|$$

$$= -\tan^{-1}\left(\frac{1}{\sqrt{3}}\right) = -\frac{\pi}{6}$$

Polar form:

$$z = r(\cos\theta + i\sin\theta)$$

$$= 1\left[\cos\left(-\frac{\pi}{6}\right) + i\sin\left(-\frac{\pi}{6}\right)\right]$$

(vii) $\dfrac{3+4i}{4+3i}$

Solution:

$$\frac{3+4i}{4+3i} = \frac{3+4i}{4+3i} \times \frac{4-3i}{4-3i}$$

$$= \frac{12-9i+16i-12i^2}{4^2-(3i)^2}$$

$$= \frac{12+7i-12i^2}{16-9i^2}$$

$$= \frac{12+7i-12(-1)}{16-9(-1)}$$

$$= \frac{12+7i+12}{16+9}$$

$$= \frac{24+7i}{25}$$

$$= \frac{24}{25} + \frac{7}{25}i$$

Let $z = x+iy = \dfrac{24}{25} + \dfrac{7}{25}i$

$$\Rightarrow x = \frac{24}{25}, y = \frac{7}{25}$$

Then, $r = |z| = \sqrt{x^2+y^2} = \sqrt{\left(\dfrac{24}{25}\right)^2 + \left(\dfrac{7}{25}\right)^2}$

$$= \sqrt{\frac{576}{625} + \frac{49}{625}}$$

$$= \sqrt{\frac{576+49}{625}}$$

$$= \sqrt{\frac{625}{625}} = \sqrt{1} = 1$$

$\because$ Both x and y are positive.

$\therefore$ θ lies in 1st quadrant.

$$\Rightarrow \theta = \tan^{-1}\left(\frac{y}{x}\right)$$

$$= \tan^{-1}\left(\frac{\frac{7}{25}}{\frac{24}{25}}\right)$$

$$= \tan^{-1}\left(\frac{7}{24}\right)$$

Polar form:

$$z = r(\cos\theta + i\sin\theta)$$

$$= 1\left[\cos\left\{\tan^{-1}\left(\frac{7}{24}\right)\right\} + i\sin\left\{\tan^{-1}\left(\frac{7}{24}\right)\right\}\right]$$

Q.3 Convert each of the complex number z in the rectangular form $x+iy$: **11301059**

(i) $4\left(\cos\dfrac{5\pi}{3} + i\sin\dfrac{5\pi}{3}\right)$

Solution:

$$4\left(\cos\frac{5\pi}{3} + i\sin\frac{5\pi}{3}\right)$$

$$= 4\left[\cos\left(2\pi - \frac{\pi}{3}\right) + i\sin\left(2\pi - \frac{\pi}{3}\right)\right]$$

$$= 4\left[\cos\frac{\pi}{3} - i\sin\frac{\pi}{3}\right]$$

$$= 4\left[\frac{1}{2} - i\left(\frac{\sqrt{3}}{2}\right)\right]$$

$$= 4\left[\frac{1-\sqrt{3}i}{2}\right]$$

$$= 2\left(1-\sqrt{3}i\right)$$

$$= 2 - 2\sqrt{3}i$$

(ii) $\frac{3}{2}\left(\cos\frac{7\pi}{6}+i\sin\frac{7\pi}{6}\right)$

Solution:

$\frac{3}{2}\left(\cos\frac{7\pi}{6}+i\sin\frac{7\pi}{6}\right)$

$=\frac{3}{2}\left[\cos\left(\pi+\frac{\pi}{6}\right)+i\sin\left(\pi+\frac{\pi}{6}\right)\right]$

$=\frac{3}{2}\left[-\cos\left(\frac{\pi}{6}\right)-i\sin\left(\frac{\pi}{6}\right)\right]$

$=\frac{3}{2}\left[-\frac{\sqrt{3}}{2}-\frac{i}{2}\right]$

$=\frac{3}{2}\left[\frac{-\sqrt{3}-i}{2}\right]$

$=-\frac{3\sqrt{3}}{4}-\frac{3}{4}i$

(iii) $|z|=7,\arg(z)=\frac{23\pi}{12}$

Solution:

$|z|=7,\arg(z)=\frac{23\pi}{12}$

$z=|z|(\cos\theta+i\sin\theta)$

$=7\left(\cos\frac{23\pi}{12}+i\sin\frac{23\pi}{12}\right)$

$=7\cos\frac{23\pi}{12}+7i\sin\frac{23\pi}{12}$

$=6.76-1.81i$

(iv) $|z|=11,\arg(z)=-\frac{11\pi}{12}$

Solution:

$|z|=11,\arg(z)=-\frac{11\pi}{12}$

$z=|z|(\cos\theta+i\sin\theta)$

$=11\left[\cos\left(-\frac{11\pi}{12}\right)+i\sin\left(-\frac{11\pi}{12}\right)\right]$

$=11\left[\cos\left(\frac{11\pi}{12}\right)-i\sin\left(\frac{11\pi}{12}\right)\right]$

$\because \cos(-\theta)=\cos\theta$ and $\sin(-\theta)=-\sin\theta$

$=11\cos\frac{11\pi}{12}-11i\sin\frac{11\pi}{12}$

$=-10.62-2.85i$

(v) $|z|=\frac{10}{3},\arg(z)=-\frac{17\pi}{12}$

Solution:

$|z|=\frac{10}{3},\arg(z)=-\frac{17\pi}{12}$

$z=|z|(\cos\theta+i\sin\theta)$

$=\frac{10}{3}\left[\cos\left(-\frac{17\pi}{12}\right)+i\sin\left(-\frac{17\pi}{12}\right)\right]$

$=\frac{10}{3}\left[\cos\left(\frac{17\pi}{12}\right)-i\sin\left(\frac{17\pi}{12}\right)\right]$

$\because \cos(-\theta)=\cos\theta$ and $\sin(-\theta)=-\sin\theta$

$=\frac{10}{3}\cos\frac{17\pi}{12}-i\frac{10}{3}\sin\frac{17\pi}{12}$

$=-0.86+3.21i$

(vi) $2\cos(-33°)+2i\sin(-33°)$

Solution:

$2\cos(-33°)+2i\sin(-33°)$

$2\cos(-33°)+2i\sin(-33°)$

$=2\cos(33°)-2i\sin(33°)$

$=1.68-1.09i$

Q.4 If $z_1=9\left(\cos\frac{5\pi}{4}+i\sin\frac{5\pi}{4}\right)$ **and** $z_2=5\left(\cos\frac{\pi}{3}+i\sin\frac{\pi}{3}\right)$ **then find:** **11301060**

(i) z_1+z_2

Solution:

Given that: $z_1=9\left(\cos\frac{5\pi}{4}+i\sin\frac{5\pi}{4}\right)$

$z_2=5\left(\cos\frac{\pi}{3}+i\sin\frac{\pi}{3}\right)$

$z_1+z_2=9\left(\cos\frac{5\pi}{4}+i\sin\frac{5\pi}{4}\right)+5\left(\cos\frac{\pi}{3}+i\sin\frac{\pi}{3}\right)$

$$= 9\cos\frac{5\pi}{4} + 9i\sin\frac{5\pi}{4} + 5\cos\frac{\pi}{3} + 5i\sin\frac{\pi}{3}$$
$$= -6.36 - 6.36i + 2.5 + 4.33i$$
$$= 2.5 - 6.36 - 6.36i + 4.33i$$
$$= -3.86 - 2.03i$$

(ii) $z_1 - z_2$

Solution:

Given that: $z_1 = 9\left(\cos\frac{5\pi}{4} + i\sin\frac{5\pi}{4}\right)$

$$z_2 = 5\left(\cos\frac{\pi}{3} + i\sin\frac{\pi}{3}\right)$$
$$z_1 - z_2 = 9\left(\cos\frac{5\pi}{4} + i\sin\frac{5\pi}{4}\right) - 5\left(\cos\frac{\pi}{3} + i\sin\frac{\pi}{3}\right)$$
$$= 9\cos\frac{5\pi}{4} + 9i\sin\frac{5\pi}{4} - 5\cos\frac{\pi}{3} - 5i\sin\frac{\pi}{3}$$
$$= -6.36 - 6.36i - 2.5 - 4.33i$$
$$= -2.5 - 6.36 - 6.36i - 4.33i$$
$$= -8.86 - 10.69i$$

(iii) $z_1 \cdot z_2$

Solution:

Given that: $z_1 = 9\left(\cos\frac{5\pi}{4} + i\sin\frac{5\pi}{4}\right)$

$$z_2 = 5\left(\cos\frac{\pi}{3} + i\sin\frac{\pi}{3}\right)$$
$$z_1.z_2 = 9\left(\cos\frac{5\pi}{4} + i\sin\frac{5\pi}{4}\right).5\left(\cos\frac{\pi}{3} + i\sin\frac{\pi}{3}\right)$$
$$= 45\left[\cos\left(\frac{5\pi}{4} + \frac{\pi}{3}\right) + i\sin\left(\frac{5\pi}{4} + \frac{\pi}{3}\right)\right]$$
$$= 45\left[\cos\left(\frac{15\pi + 4\pi}{12}\right) + i\sin\left(\frac{15\pi + 4\pi}{12}\right)\right]$$
$$= 45\left(\cos\frac{19\pi}{12} + i\sin\frac{19\pi}{12}\right)$$

(iv) $\frac{z_1}{z_2}$

Solution:

Given that: $z_1 = 9\left(\cos\frac{5\pi}{4} + i\sin\frac{5\pi}{4}\right)$

$$z_2 = 5\left(\cos\frac{\pi}{3} + i\sin\frac{\pi}{3}\right)$$
$$\frac{z_1}{z_2} = \frac{9\left(\cos\frac{5\pi}{4} + i\sin\frac{5\pi}{4}\right)}{5\left(\cos\frac{\pi}{3} + i\sin\frac{\pi}{3}\right)}$$
$$= \frac{9}{5}\left[\cos\left(\frac{5\pi}{4} - \frac{\pi}{3}\right) + i\sin\left(\frac{5\pi}{4} - \frac{\pi}{3}\right)\right]$$
$$= \frac{9}{5}\left[\cos\left(\frac{15\pi - 4\pi}{12}\right) + i\sin\left(\frac{15\pi - 4\pi}{12}\right)\right]$$
$$= \frac{9}{5}\left(\cos\frac{11\pi}{12} + i\sin\frac{11\pi}{12}\right)$$

Q.5 If $z_1 = 7\left(\cos\frac{23\pi}{12} + i\sin\frac{23\pi}{12}\right)$ **and** $z_2 = 11\left(\cos\frac{11\pi}{12} + i\sin\frac{11\pi}{12}\right)$ **then find the following and express the result into** $x + iy$ **form.** **11301061**

(i) $z_1 + z_2$

Solution:

Given that: $z_1 = 7\left(\cos\frac{23\pi}{12} + i\sin\frac{23\pi}{12}\right)$

$$z_2 = 11\left(\cos\frac{11\pi}{12} + i\sin\frac{11\pi}{12}\right)$$
$$z_1 + z_2 = 7\left(\cos\frac{23\pi}{12} + i\sin\frac{23\pi}{12}\right) + 11\left(\cos\frac{11\pi}{12} + i\sin\frac{11\pi}{12}\right)$$
$$= 7\cos\frac{23\pi}{12} + 7i\sin\frac{23\pi}{12} + 11\cos\frac{11\pi}{12} + 11i\sin\frac{11\pi}{12}$$
$$= 6.76 - 1.81i - 10.62 + 2.85i$$
$$= 6.76 - 10.62 + 2.85i - 1.81i$$
$$= -3.86 + 1.04i$$

(ii) $z_1 - z_2$

Solution:

Given that: $z_1 = 7\left(\cos\frac{23\pi}{12} + i\sin\frac{23\pi}{12}\right)$

$z_2 = 11\left(\cos\frac{11\pi}{12} + i\sin\frac{11\pi}{12}\right)$

$z_1 - z_2 = 7\left(\cos\frac{23\pi}{12} + i\sin\frac{23\pi}{12}\right) - 11\left(\cos\frac{11\pi}{12} + i\sin\frac{11\pi}{12}\right)$

$= 7\cos\frac{23\pi}{12} + 7i\sin\frac{23\pi}{12} - 11\cos\frac{11\pi}{12} - 11i\sin\frac{11\pi}{12}$

$= 6.76 - 1.81i + 10.62 - 2.85i$

$= 6.76 + 10.62 - 2.85i - 1.81i$

$= 17.38 - 4.66i$

(iii) $z_1.z_2$

Solution:

Given that: $z_1 = 7\left(\cos\frac{23\pi}{12} + i\sin\frac{23\pi}{12}\right)$

$z_2 = 11\left(\cos\frac{11\pi}{12} + i\sin\frac{11\pi}{12}\right)$

$z_1.z_2 = 7\left(\cos\frac{23\pi}{12} + i\sin\frac{23\pi}{12}\right).11\left(\cos\frac{11\pi}{12} + i\sin\frac{11\pi}{12}\right)$

$= 77\left[\cos\left(\frac{23\pi}{12} + \frac{11\pi}{12}\right) + i\sin\left(\frac{23\pi}{12} + \frac{11\pi}{12}\right)\right]$

$= 77\left[\cos\left(\frac{23\pi + 11\pi}{12}\right) + i\sin\left(\frac{23\pi + 11\pi}{12}\right)\right]$

$= 77\left(\cos\frac{34\pi}{12} + i\sin\frac{34\pi}{12}\right)$

$= 77\cos\frac{34\pi}{12} + 77i\sin\frac{34\pi}{12}$

$= -66.68 + 38.5i$

(iv) $\frac{z_1}{z_2}$

Solution:

Given that: $z_1 = 7\left(\cos\frac{23\pi}{12} + i\sin\frac{23\pi}{12}\right)$

$z_2 = 11\left(\cos\frac{11\pi}{12} + i\sin\frac{11\pi}{12}\right)$

$\frac{z_1}{z_2} = \frac{7\left(\cos\frac{23\pi}{12} + i\sin\frac{23\pi}{12}\right)}{11\left(\cos\frac{11\pi}{12} + i\sin\frac{11\pi}{12}\right)}$

$= \frac{7}{11}\left[\cos\left(\frac{23\pi}{12} - \frac{11\pi}{12}\right) + i\sin\left(\frac{23\pi}{12} - \frac{11\pi}{12}\right)\right]$

$= \frac{7}{11}\left[\cos\left(\frac{23\pi - 11\pi}{12}\right) + i\sin\left(\frac{23\pi - 11\pi}{12}\right)\right]$

$= \frac{7}{11}\left(\cos\frac{12\pi}{12} + i\sin\frac{12\pi}{12}\right)$

$= \frac{7}{11}(\cos\pi + i\sin\pi)$

$= \frac{7}{11}(-1 + i.0)$

$= -\frac{7}{11} + i.0$

Q.6 If z_1 and z_2 are two complex numbers, show that: **11301062**

(i) $Arg(z_1.z_2) = Arg(z_1) + Arg(z_2)$

Solution:

Let

$z_1 = r_1(\cos\theta_1 + i\sin\theta_1)$

$z_2 = r_2(\cos\theta_2 + i\sin\theta_2)$, then

$Arg(z_1) = \theta_1$ and $Arg(z_2) = \theta_2$

Now $z_1z_2 = r_1r_2[\cos(\theta_1 + \theta_2) + i\sin(\theta_1 + \theta_2)]$

$\Rightarrow Arg(z_1.z_2) = \theta_1 + \theta_2$

$= Arg(z_1) + Arg(z_2)$

Hence proved.

(ii) $Arg\left(\frac{z_1}{z_2}\right) = Arg(z_1) - Arg(z_2)$

Solution:

Let

$z_1 = r_1(\cos\theta_1 + i\sin\theta_1)$

$z_2 = r_2(\cos\theta_2 + i\sin\theta_2)$, then

Then $Arg(z_1) = \theta_1$ and $Arg(z_2) = \theta_2$

Now $\frac{z_1}{z_2} = \frac{r_1}{r_2}[\cos(\theta_1 - \theta_2) + i\sin(\theta_1 - \theta_2)]$

$\Rightarrow Arg\left(\frac{z_1}{z_2}\right) = \theta_1 - \theta_2 = Arg(z_1) - Arz(z_2)$

Hence proved.

Q.7 Divide $z_1 = 6(\cos 150° + i\sin 150°)$ **by** $z_2 = 3(\cos 30° + i\sin 30°)$ **and express in** $x + iy$ **form.** **11301063**

Solution:

Given that:

$z_1 = 6(\cos 150° + i\sin 150°)$

$z_2 = 3(\cos 30° + i\sin 30°)$

Here, $r_1 = 6, \theta_1 = 150°, r_2 = 3, \theta_2 = 30°$

Now, $\frac{z_1}{z_2} = \frac{r_1}{r_2}\left[\cos(\theta_1 - \theta_2) + i\sin(\theta_1 - \theta_2)\right]$

$= \frac{6}{3}\left[\cos(150° - 30°) + i\sin(150° - 30°)\right]$

$= 2\left[\cos 120° + i\sin 120°\right]$

$= 2\left[\cos(90° + 30°) + i\sin(90° + 30°)\right]$

$= 2\left[-\sin 30° + i\cos 30°\right]$

$= 2\left[-\frac{1}{2} + i\frac{\sqrt{3}}{2}\right]$

$= 2\left[\frac{-1 + i\sqrt{3}}{2}\right]$

$= -1 + i\sqrt{3}$

Q.8 Multiply $z_1 = 2(\cos 60° + i\sin 60°)$ **and** $z_2 = 5(\cos 90° + i\sin 90°)$ **and express in** $x + iy$ **form.** **11301064**

Solution:

Given that:

$z_1 = 2(\cos 60° + i\sin 60°)$

$z_2 = 5(\cos 90° + i\sin 90°)$

Here, $r_1 = 2, \theta_1 = 60°, r_2 = 5, \theta_2 = 90°$

Now, $z_1 z_2 = r_1 r_2\left[\cos(\theta_1 + \theta_2) + i\sin(\theta_1 + \theta_2)\right]$

$= (2)(5)\left[\cos(60° + 90°) + i\sin(60° + 90°)\right]$

$= 10\left[\cos 150° + i\sin 150°\right]$

$= 10\left[\cos(180° - 30°) + i\sin(180° - 30°)\right]$

$= 10\left[-\cos 30° + i\sin 30°\right]$

$= 10\left[-\frac{\sqrt{3}}{2} + i\left(\frac{1}{2}\right)\right]$

$= 10\left[\frac{-\sqrt{3} + i}{2}\right]$

$= 5\left(-\sqrt{3} + i\right)$

$= -5\sqrt{3} + 5i$

Q.9 Find the modulus and argument of $z = -2 - 2i$. **11301065**

Solution:

Given that:

$z = -2 - 2i$

$\Rightarrow x = -2, y = -2$

Then, $|z| = \sqrt{x^2 + y^2}$

$= \sqrt{(-2)^2 + (-2)^2}$

$= \sqrt{4 + 4}$

$= \sqrt{8} = 2\sqrt{2}$

$\because$ both x and y are negative.

$\therefore$ θ lies in 3rd quadrant.

$\Rightarrow \theta = \pi + \tan^{-1}\left|\frac{y}{x}\right|$

$= \pi + \tan^{-1}\left|\frac{-2}{-2}\right|$

$= \pi + \tan^{-1}|1|$

$= \pi + \tan^{-1}(1)$

$= \pi + \frac{\pi}{4}$

$= \frac{4\pi + \pi}{4} = \frac{5\pi}{4}$ *or* $= \frac{5\pi}{4} + 2n\pi$

Q.10 Write the equation $\arg(\bar{z} - 2 + i) = \frac{2\pi}{3}$ **in Cartesian form, if** $z = x + iy$. **11301066**

Solution:

Given that:

$z = x + iy$

$\arg(\bar{z} - 2 + i) = \frac{2\pi}{3}$

$\Rightarrow \arg(\overline{x+iy} - 2 + i) = \frac{2\pi}{3}$

$\Rightarrow \arg(x - iy - 2 + i) = \frac{2\pi}{3}$

$\Rightarrow \arg(x - 2 + i - iy) = \frac{2\pi}{3}$

$\Rightarrow \arg\{(x-2) + i(1-y)\} = \frac{2\pi}{3}$

$\Rightarrow \tan^{-1}\left(\frac{1-y}{x-2}\right) = \frac{2\pi}{3}$

$\because \arg(z) = \tan^{-1}\left(\frac{y}{x}\right)$

$\Rightarrow \frac{1-y}{x-2} = \tan\frac{2\pi}{3}$

$\Rightarrow \frac{1-y}{x-2} = \tan\left(\pi - \frac{\pi}{3}\right)$

$\Rightarrow \frac{1-y}{x-2} = -\tan\frac{\pi}{3}$

$\Rightarrow \frac{1-y}{x-2} = -\sqrt{3}$

$\Rightarrow 1 - y = -\sqrt{3}(x-2)$

$\Rightarrow 1 - y = -\sqrt{3}x + 2\sqrt{3}$

$\Rightarrow 1 + \sqrt{3}x - 2\sqrt{3} = y$

$\Rightarrow y = 1 + \sqrt{3}x - 2\sqrt{3}$

$\Rightarrow y = \sqrt{3}x - 2\sqrt{3} + 1$

Q.11 If $z = x + iy$ **and** $\arg\left(\frac{\bar{z} - 1 + 2i}{\bar{z} + 1 - 2i}\right) = \frac{9\pi}{4}$**,**

show that $x^2 + y^2 - 4x + 2y - 5 = 0$. **11301067**

Solution:

Given that: $z = x + iy$ and

$\arg\left(\frac{\bar{z} - 1 + 2i}{\bar{z} + 1 - 2i}\right) = \frac{9\pi}{4}$

$\Rightarrow \arg\left(\frac{\overline{x+iy} - 1 + 2i}{\overline{x+iy} + 1 - 2i}\right) = \frac{9\pi}{4}$

$\Rightarrow \arg\left(\frac{x - iy - 1 + 2i}{x - iy + 1 - 2i}\right) = \frac{9\pi}{4}$

$\Rightarrow \arg\left(\frac{x - 1 + 2i - iy}{x + 1 - 2i - iy}\right) = \frac{9\pi}{4}$

$\Rightarrow \arg\left(\frac{(x-1) + i(2-y)}{(x+1) - i(2+y)}\right) = \frac{9\pi}{4}$

$\Rightarrow \arg\left(\frac{(x-1) + i(2-y)}{(x+1) - i(2+y)} \times \frac{(x+1) + i(2+y)}{(x+1) + i(2+y)}\right) = \frac{9\pi}{4}$

$\Rightarrow \arg\left(\frac{x^2 - 1 + i(x-1)(2+y) + i(2-y)(x+1) + i^2(4-y^2)}{(x+1)^2 - (i^2)(2+y)^2}\right) = \frac{9\pi}{4}$

$\Rightarrow \arg\left(\frac{x^2 - 1 + i(2x + xy - 2 - y) + i(2x + 2 - xy - y) + (-1)(4-y^2)}{(x+1)^2 - (-1)(2+y)^2}\right) = \frac{9\pi}{4}$

$\Rightarrow \arg\left(\frac{x^2 - 1 + i(2x + xy - 2 - y + 2x + 2 - xy - y) - 4 + y^2}{(x+1)^2 + (2+y)^2}\right) = \frac{9\pi}{4}$

$\Rightarrow \arg\left(\frac{x^2 - 1 + i(2x - y + 2x - y) - 4 + y^2}{(x+1)^2 + (y+2)^2}\right) = \frac{9\pi}{4}$

$\Rightarrow \arg\left(\frac{x^2 - 1 + i(4x - 2y) - 4 + y^2}{(x+1)^2 + (y+2)^2}\right) = \frac{9\pi}{4}$

$\Rightarrow \arg\left(\frac{(x^2 + y^2 - 5) + i(4x - 2y)}{(x+1)^2 + (y+2)^2}\right) = \frac{9\pi}{4}$

$\Rightarrow \arg\left(\frac{x^2 + y^2 - 5}{(x+1)^2 + (y+2)^2} + i\frac{4x - 2y}{(x+1)^2 + (y+2)^2}\right) = \frac{9\pi}{4}$

$\Rightarrow \tan^{-1}\left(\frac{\frac{4x - 2y}{(x+1)^2 + (y+2)^2}}{\frac{x^2 + y^2 - 5}{(x+1)^2 + (y+2)^2}}\right) = \frac{9\pi}{4}$

$\because \arg(z) = \tan^{-1}\left(\frac{y}{x}\right)$

$\Rightarrow \tan^{-1}\left(\frac{4x - 2y}{x^2 + y^2 - 5}\right) = \frac{9\pi}{4}$

$$\Rightarrow \frac{4x-2y}{x^2+y^2-5} = \tan\frac{9\pi}{4}$$

$$\Rightarrow \frac{4x-2y}{x^2+y^2-5} = \tan\left(2\pi+\frac{\pi}{4}\right)$$

$$\Rightarrow \frac{4x-2y}{x^2+y^2-5} = \tan\frac{\pi}{4}$$

$$\Rightarrow \frac{4x-2y}{x^2+y^2-5} = 1$$

$$\Rightarrow 4x-2y = x^2+y^2-5$$

$$\Rightarrow 0 = x^2+y^2-5-4x+2y$$

$$\Rightarrow x^2+y^2-4x+2y-5=0$$

Hence proved.

Q.12 If $z = x+iy$ **and** $\arg(z-2-3i)-\arg(z+2+3i)=2\pi$**, show that** $2y=3x$**.**

Solution: **11301068**

Given that:

$$z = x+iy$$

$$\arg(z-2-3i)-\arg(z+2+3i)=2\pi$$

$$\Rightarrow \arg(x+iy-2-3i)-\arg(x+iy+2+3i)=2\pi$$

$$\Rightarrow \arg\left[(x-2)+i(y-3)\right]$$

$$-\arg\left[(x+2)+i(y+3)\right]=2\pi$$

$$\Rightarrow \tan^{-1}\left(\frac{y-3}{x-2}\right)-\tan^{-1}\left(\frac{y+3}{x+2}\right)=2\pi$$

$$\because \arg(z)=\tan^{-1}\left(\frac{y}{x}\right)$$

$$\Rightarrow \tan^{-1}\left[\frac{\frac{y-3}{x-2}-\frac{y+3}{x+2}}{1+\left(\frac{y-3}{x-2}\right)\left(\frac{y+3}{x+2}\right)}\right]=2\pi$$

$$\because \tan^{-1}A-\tan^{-1}B=\tan^{-1}\left(\frac{A-B}{1+AB}\right)$$

$$\Rightarrow \tan^{-1}\left[\frac{\frac{(y-3)(x+2)-(y+3)(x-2)}{(x-2)(x+2)}}{\frac{(x-2)(x+2)+(y-3)(y+3)}{(x-2)(x+2)}}\right]=2\pi$$

$$\Rightarrow \tan^{-1}\left[\frac{(y-3)(x+2)-(y+3)(x-2)}{(x-2)(x+2)+(y-3)(y+3)}\right]=2\pi$$

$$\Rightarrow \frac{(y-3)(x+2)-(y+3)(x-2)}{(x-2)(x+2)+(y-3)(y+3)}=\tan 2\pi$$

$$\Rightarrow \frac{(y-3)(x+2)-(y+3)(x-2)}{(x-2)(x+2)+(y-3)(y+3)}=0$$

$$\Rightarrow (y-3)(x+2)-(y+3)(x-2)=0$$

$$\Rightarrow xy+2y-3x-6-(xy-2y+3x-6)=0$$

$$\Rightarrow xy+2y-3x-6-xy+2y-3x+6=0$$

$$\Rightarrow 4y-6x=0$$

$$\Rightarrow 4y=6x$$

$$\Rightarrow 2y=3x$$

Hence proved.

Q.13 Solve the equation $|z-2i|=|\bar{z}+2|$ **for** $z=x+iy$**.** **11301069**

Solution:

Given that:

$$|z-2i|=|\bar{z}+2|$$

$$\Rightarrow |x+iy-2i|=|\overline{x+iy}+2|$$

$$\because z=x+iy$$

$$\Rightarrow |x+iy-2i|=|x-iy+2|$$

$$\Rightarrow |x+i(y-2)|=|(x+2)-iy|$$

$$\Rightarrow \sqrt{x^2+(y-2)^2}=\sqrt{(x+2)^2+(-y)^2}$$

$$\Rightarrow \sqrt{x^2+(y-2)^2}=\sqrt{(x+2)^2+y^2}$$

Squaring on both sides, we get

$$x^2+(y-2)^2=(x+2)^2+y^2$$

$\Rightarrow x^2+y^2-4y+4=x^2+4x+4+y^2$

$\Rightarrow x^2+y^2-4y+4-x^2-4x-4-y^2=0$

$\Rightarrow -4y-4x=0$

$\Rightarrow -4y=4x$

$\Rightarrow y=-x$

Q.14 For $z=x+iy$, solve the equation $|5z+4+i|=|5\bar{z}-3+2i|$. **11301070**

Solution:

Given that:

$|5z+4+i|=|5\bar{z}-3+2i|$

$\Rightarrow |5(x+iy)+4+i|=|5(\overline{x+iy})-3+2i|$

$\because z=x+iy$

$\Rightarrow |5x+5iy+4+i|=|5(x-iy)-3+2i|$

$\Rightarrow |5x+4+5iy+i|=|5x-5iy-3+2i|$

$\Rightarrow |(5x+4)+i(5y+1)|=|(5x-3)+i(2-5y)|$

$\Rightarrow \sqrt{(5x+4)^2+(5y+1)^2}=\sqrt{(5x-3)^2+(2-5y)^2}$

Squaring on both sides, we get

$(5x+4)^2+(5y+1)^2=(5x-3)^2+(2-5y)^2$

$\Rightarrow 25x^2+40x+16+25y^2+10y+1$

$=25x^2-30x+9+4-20y+25y^2$

$\Rightarrow 25x^2+40x+16+25y^2+10y+1$

$-25x^2+30x-9-4+20y-25y^2=0$

$\Rightarrow 70x+30y+4=0$

$\Rightarrow 30y=-70x-4$

$\Rightarrow y=-\frac{70}{30}x-\frac{4}{30}$

$\Rightarrow y=-\frac{7}{3}x-\frac{2}{15}$

Q.15 Determine the set of points $z=x+iy$ that satisfy the equation $|3\bar{z}-2+i|=|3z+i|$. **11301071**

Solution:

Given that:

$|3\bar{z}-2+i|=|3z+i|$

$\Rightarrow |3(\overline{x+iy})-2+i|=|3(x+iy)+i|$

$\because z=x+iy$

$\Rightarrow |3(x-iy)-2+i|=|3(x+iy)+i|$

$\Rightarrow |3x-2+i-3iy|=|3x+3iy+i|$

$\Rightarrow |3x-2+i-3iy|=|3x+3iy+i|$

$\Rightarrow |(3x-2)+i(1-3y)|=|3x+i(3y+1)|$

$=\sqrt{(3x-2)^2+(1-3y)^2}=\sqrt{(3x)^2+(3y+1)^2}$

Squaring on both sides, we get

$(3x-2)^2+(1-3y)^2=(3x)^2+(3y+1)^2$

$\Rightarrow 9x^2-12x+4+1-6y+9y^2=9x^2+9y^2+6y+1$

$\Rightarrow 9x^2-12x+4+1-6y+9y^2-9x^2-9y^2-6y-1=0$

$\Rightarrow -12x+4-6y-6y=0$

$\Rightarrow -12x-12y+4=0$

$\Rightarrow -12y=12x-4$

$\Rightarrow y=\frac{12}{-12}x-\frac{4}{-12}$

$\Rightarrow y=-x+\frac{1}{3}$

Q.16 If $z=x+iy$ and $w=\frac{1-iz}{z-i}$ show that $|w|=1\Rightarrow z$ is real. **11301072**

Solution:

Given that: $z=x+iy$

$w=\frac{1-iz}{z-i}$

$\Rightarrow w=\frac{1-i(x+iy)}{x+iy-i}$

$=\frac{1-ix-i^2y}{x+iy-i}$

$=\frac{1-ix-(-1)y}{x+iy-i}$

$$= \frac{1-ix+y}{x+iy-i}$$

$$= \frac{(1+y)-ix}{x+i(y-1)}$$

Taking modulus on both sides, we get

$$|w| = \left|\frac{(1+y)-ix}{x+i(y-1)}\right|$$

$$\Rightarrow |w| = \frac{|(1+y)-ix|}{|x+i(y-1)|}$$

$$= \frac{\sqrt{(1+y)^2+(-x)^2}}{\sqrt{(x)^2+(y-1)^2}}$$

$$= \frac{\sqrt{(1+y)^2+x^2}}{\sqrt{(x)^2+(y-1)^2}}$$

Now, $|w| = 1$

$$\Rightarrow \frac{\sqrt{(1+y)^2+x^2}}{\sqrt{(x)^2+(y-1)^2}} = 1$$

$$\Rightarrow \sqrt{(1+y)^2+x^2} = \sqrt{x^2+(y-1)^2}$$

Squaring on both sides, we get

$$(1+y)^2+x^2 = x^2+(y-1)^2$$

$$\Rightarrow 1+2y+y^2+x^2 = x^2+y^2-2y+1$$

$$\Rightarrow 1+2y+y^2+x^2-x^2-y^2+2y-1 = 0$$

$$\Rightarrow 4y = 0$$

$$\Rightarrow y = 0$$

$$\Rightarrow \text{Im}(z) = 0$$

$\Rightarrow z$ is real.

Hence proved.

Q.17 If z_1 and z_2 are different complex numbers with $|z_2| = 1$, find $\left|\frac{z_2-z_1}{1-\overline{z_1}z_2}\right|$. **11301073**

Solution:

$$\left|\frac{z_2-z_1}{1-\overline{z_1}z_2}\right| = \left|\frac{z_2-z_1}{\overline{1-\overline{z_1}z_2}}\right| \because |z| = |\overline{z}|$$

$$= \left|\frac{z_2-z_1}{1-\overline{z_1}\,\overline{z_2}}\right| \because \overline{z_1+z_2} = \overline{z_1}+\overline{z_2}$$

$$= \left|\frac{z_2-z_1}{1-z_1\overline{z_2}}\right| \because \overline{\overline{z}} = z$$

$$= \frac{|z_2|}{|z_2|}\left|\frac{z_2-z_1}{1-z_1\overline{z_2}}\right|$$

$$= |z_2|\left|\frac{z_2-z_1}{z_2(1-z_1\overline{z_2})}\right| \because |z_1z_2| = |z_1||z_2|$$

$$= |z_2|\left|\frac{z_2-z_1}{z_2-z_1z_2\overline{z_2}}\right|$$

$$= |z_2|\left|\frac{z_2-z_1}{z_2-z_1|z_2|^2}\right| \because z\overline{z} = |z|^2$$

$$= (1)\left|\frac{z_2-z_1}{z_2-z_1(1)^2}\right| \because |z_2| = 1$$

$$= \left|\frac{z_2-z_1}{z_2-z_1}\right| = |1| = 1$$

Q.18 An AC source supplies a voltage of $V = 120\left(\cos\frac{\pi}{4}+i\sin\frac{\pi}{4}\right)$ volts to a circuit with impedance $Z = \frac{1+i\sqrt{3}}{2}$ ohms. Calculate the current in polar form. **11301074**

Solution:

Given that:

$$V = 120\left(\cos\frac{\pi}{4}+i\sin\frac{\pi}{4}\right)$$

and $Z = \frac{1+i\sqrt{3}}{2}$

By ohms law $I = \frac{V}{Z}$

So, we have to convert z in polar form.

$$z = \frac{1+i\sqrt{3}}{2}$$

$$z = \frac{1}{2} + \frac{i\sqrt{3}}{2} \qquad \because z = x + iy$$

$$\Rightarrow x = \frac{1}{2}, y = \frac{\sqrt{3}}{2}$$

$$r = |z| = \sqrt{x^2 + y^2}$$

$$r = \sqrt{\left(\frac{1}{2}\right)^2 + \left(\frac{\sqrt{3}}{2}\right)^2}$$

$$r = \sqrt{\frac{1}{4} + \frac{3}{4}}$$

$$r = \sqrt{\frac{1+3}{4}}$$

$$r = \sqrt{\frac{4}{4}} = \sqrt{1} = 1$$

$\because$ both x and y are positive.

$\therefore$ θ lies in 1st quadrant.

$$\Rightarrow \theta = \tan^{-1}\left(\frac{y}{x}\right)$$

$$= \tan^{-1}\left(\frac{\frac{\sqrt{3}}{2}}{\frac{1}{2}}\right)$$

$$= \tan^{-1}\left(\sqrt{3}\right) = \frac{\pi}{3}$$

Thus, polar form of z is

$$z = 1\left(\cos\frac{\pi}{3} + i\sin\frac{\pi}{3}\right)$$

$$\therefore I = \frac{V}{Z}$$

$$= \frac{120\left(\cos\frac{\pi}{4} + i\sin\frac{\pi}{4}\right)}{1\left(\cos\frac{\pi}{3} + i\sin\frac{\pi}{3}\right)}$$

$$= \frac{120}{1}\left[\cos\left(\frac{\pi}{4} - \frac{\pi}{3}\right) + i\sin\left(\frac{\pi}{4} - \frac{\pi}{3}\right)\right]$$

$$= 120\left[\cos\left(\frac{3\pi - 4\pi}{12}\right) + i\sin\left(\frac{3\pi - 4\pi}{12}\right)\right]$$

$$= 120\left[\cos\left(-\frac{\pi}{12}\right) + i\sin\left(-\frac{\pi}{12}\right)\right]$$

$$= 120\left[\cos\frac{\pi}{12} - i\sin\frac{\pi}{12}\right]$$

$\because \cos(-\theta) = \cos\theta$ and $\sin(-\theta) = -\sin\theta$

Q.19 An AC circuit has a impedance of $Z = 3 - 6i$ ohms and is connected to a voltage source of $V = 90 + 30i$ volts. Find the current in both rectangular and polar form. **11301075**

Solution:

Given that $V = 90 + 30i$

and $Z = 3 - 6i$

By ohms law $I = \frac{V}{Z}$

$$= \frac{90 + 30i}{3 - 6i} = \frac{30(3+i)}{3(1-2i)}$$

$$= \frac{10(3+i)}{1-2i} \times \frac{1+2i}{1+2i}$$

$$= \frac{10(3 + 6i + i + 2i^2)}{1^2 - (2i)^2}$$

$$= \frac{10(3 + 7i + 2(-1))}{1 - 4i^2}$$

$$= \frac{10(3 + 7i - 2)}{1 - 4(-1)}$$

$$= \frac{10(1+7i)}{1+4}$$

$$= \frac{10(1+7i)}{5}$$

$$= 2(1+7i) = 2 + 14i$$

In polar form

$\Rightarrow x = 2, y = 14$

$r = \sqrt{x^2 + y^2}$

$= \sqrt{2^2 + 14^2}$

$= \sqrt{4 + 196}$

$= \sqrt{200} = 10\sqrt{2}$

$\because$ both x and y are positive

$\therefore$ θ lies in 1st quadrant.

$\Rightarrow \theta = \tan^{-1}\left(\frac{y}{x}\right)$

$= \tan^{-1}\left(\frac{14}{2}\right)$

$= \tan^{-1}(7) = 81.87°$

Thus, polar form is:

$I = 10\sqrt{2}(\cos 81.87° + i \sin 81.87°)$

Q.20 Encrypt the word "CODE" by multiplying the complex encryption key $k = 2 - i$. Then decrypt it back to the original word. **11301076**

Solution:

We assign each alphabet a numerical value as follows.

$A = 1, B = 2, C = 3, ..., Z = 26$

$C = 3 = 3 + 0i$ is encrypted as

$k \times C = (2 - i)(3 + 0i) = 6 - 3i$

$O = 15 = 15 + 0i$ is encrypted as:

$k \times O = (2 - i)(15 + 0i) = 30 - 15i$

$D = 4 = 4 + 0i$ is encrypted as:

$k \times D = (2 - i)(4 + 0i) = 8 - 4i$

$E = 5 = 5 + 0i$ is encrypted as:

$k \times E = (2 - i)(5 + 0i) = 10 - 5i$

In order to decrypt the original word i.e. CODE, we have to divide the above complex numbers by k as follows:

$$\frac{6-3i}{2-i} = \frac{6-3i}{2-i} \times \frac{2+i}{2+i}$$

$$= \frac{12 + 6i - 6i - 3i^2}{2^2 - i^2}$$

$$= \frac{12 - 3(-1)}{4 - (-1)}$$

$$= \frac{12 + 3}{4 + 1}$$

$$= \frac{15}{5} = 3$$

$$\frac{6-3i}{2-i} = 3 + i.0 = C$$

Now,

$$\frac{30-15i}{2-i} = \frac{30-15i}{2-i} \times \frac{2+i}{2+i}$$

$$= \frac{60 + 30i - 30i - 15i^2}{2^2 - i^2}$$

$$= \frac{60 - 15(-1)}{4 - (-1)}$$

$$= \frac{60 + 15}{4 + 1}$$

$$= \frac{75}{5} = 15$$

$$\frac{30-15i}{2-i} = 15 + i.0 = O$$

Also,

$$\frac{8-4i}{2-i} = \frac{8-4i}{2-i} \times \frac{2+i}{2+i}$$

$$= \frac{16 + 8i - 8i - 4i^2}{2^2 - i^2}$$

$$= \frac{16 - 4(-1)}{4 - (-1)}$$

$$= \frac{16 + 4}{4 + 1}$$

$$= \frac{20}{5} = 4$$

$$\frac{8-4i}{2-i}=4+i.0=D$$

$$\frac{10-5i}{2-i}=\frac{10-5i}{2-i}\times\frac{2+i}{2+i}$$

$$=\frac{20+10i-10i-5i^2}{2^2-i^2}$$

$$=\frac{20-5(-1)}{4-(-1)}$$

$$=\frac{20+5}{4+1}$$

$$=\frac{25}{5}=5$$

$$\frac{10-5i}{2-i}=5+i.0=E$$

Q.21 Consider the complex encryption key $k=3-3i$. Encrypt the word "QUIZ", and then recover the original word using inverse of the key. **11301077**

Solution:

We assign each alphabet a numerical value as follows.

$A=1, B=2, C=3,...,Z=26$

$Q=17=17+0i$ is encrypted as:

$k\times Q=(3-3i)(17+0i)=51-51i$

$U=21=21+0i$ is encrypted as:

$k\times U=(3-3i)(21+0i)=63-63i$

$I=9=9+0i$ is encrypted as:

$k\times I=(3-3i)(9+0i)=27-27i$

$z=26=26+0i$ is encrypted as:

$k\times Z=(3-3i)(26+0i)=78-78i$

In order to decrypt the original word i.e. "QUIZ", we have to divide the above complex numbers by k as follows:

$$\frac{51-51i}{3-3i}=\frac{51-51i}{3-3i}\times\frac{3+3i}{3+3i}$$

$$=\frac{153+153i-153i-153i^2}{9-9i^2}$$

$$=\frac{153-153(-1)}{9-9(-1)}$$

$$=\frac{153+153}{9+9}$$

$$=\frac{306}{18}=17=17+i.0=Q$$

$$\frac{63-63i}{3-3i}=\frac{63-63i}{3-3i}\times\frac{3+3i}{3+3i}$$

$$=\frac{189+189i-189i-189i^2}{9-9i^2}$$

$$=\frac{189-189(-1)}{9-9(-1)}$$

$$=\frac{189+189}{9+9}$$

$$=\frac{378}{18}=21=21+i.0=U$$

$$\frac{27-27i}{3-3i}=\frac{27-27i}{3-3i}\times\frac{3+3i}{3+3i}$$

$$=\frac{81+81i-81i-81i^2}{9-9i^2}$$

$$=\frac{81-81(-1)}{9-9(-1)}$$

$$=\frac{81+81}{9+9}$$

$$=\frac{162}{18}=9=9+i.0=I$$

$$\frac{78-78i}{3-3i}=\frac{78-78i}{3-3i}\times\frac{3+3i}{3+3i}$$

$$=\frac{234+234i-234i-234i^2}{9-9i^2}$$

$$=\frac{234-234(-1)}{9-9(-1)}$$

$$=\frac{234+234}{9+9}$$

$$= \frac{468}{18} = 26 = 26 + i.0 = Z$$

Q.22 Encrypt the word "CLASS" by adding the complex encryption key $k = -3 + 4i$. Then decrypt it back to the original word. **11301078**

Solution:

We assign each alphabet a numerical value as follows:

$A = 1, B = 2, C = 3, ..., Z = 26$

$C = 3 = 3 + 0i$ is encrypted as:

$k + C = (-3 + 4i) + (3 + 0i) = 0 + 4i$

$L = 12 = 12 + 0i$ is encrypted as:

$k + L = (-3 + 4i) + (12 + 0i) = 9 + 4i$

$A = 1 = 1 + 0i$ is encrypted as:

$k + A = (-3 + 4i) + (1 + 0i) = -2 + 4i$

$S = 19 = 19 + 0i$ is encrypted as:

$k + S = (-3 + 4i) + (19 + 0i) = 16 + 4i$

$S = 19 = 19 + 0i$ is encrypted as:

$k + S = (-3 + 4i) + (19 + 0i) = 16 + 4i$

In order to decrypt the original word i.e. CLASS, we have to subtract k form the above complex numbers as follows:

$0 + 4i - (-3 + 4i) = 0 + 4i + 3 - 4i = 3 + i.0 = C$

$9 + 4i - (-3 + 4i) = 9 + 4i + 3 - 4i = 12 + i.0 = L$

$-2 + 4i - (3 + 4i) = -2 + 4i + 3 - 4i = 1 + i.0 = A$

$16 + 4i - (-3 + 4i) = 16 + 4i + 3 - 4i = 19 + i.0 = S$

$16 + 4i - (-3 + 4i) = 16 + 4i + 3 - 4i = 19 + i.0 = S$

ADDITIONAL MCQS

Complex numbers

1. A number of the form $z = a + ib, a, b \in R$ and $i = \sqrt{-1}$, is called a … number. **11301079**

(a) Complex (b) Rational
(c) Irrational (d) Natural

2. Every real number is also a complex number with … imaginary part: **11301080**

(a) 1 (b) 0
(c) -1 (d) imaginary

3. The set which don't satisfy order properties is … **11301081**

(a) N (b) Z
(c) C (d) R

Recognition of Real and Imaginary parts

4. If $z = a + ib$, its real and imaginary parts are respectively: **11301082**

(a) a and b (b) $-a$ and b
(c) a and $-b$ (d) $-a$ and $-b$

5. $\frac{z + \bar{z}}{2} = ...$ **11301083**

(a) z (b) $\bar{z}$
(c) $-\text{Re}(\bar{z})$ (d) $\text{Re}(z)$

6. $\frac{z - \bar{z}}{2i} = ...$ **11301084**

(a) $\text{Re}(z)$ (b) $\text{Im}(\bar{z})$
(c) $\text{Re}(\bar{z})$ (d) $\text{Im}(z)$

7. Real part of $\frac{i}{1+i}$ is: **11301085**

(a) $\frac{1}{2}$ (b) $-\frac{1}{2}$
(c) $\frac{i}{2}$ (d) $-\frac{i}{2}$

8. Imaginary part of $\frac{i}{1+i}$ is: **11301086**

(a) $\frac{1}{2}$ (b) $-\frac{1}{2}$
(c) $\frac{i}{2}$ (d) $-\frac{i}{2}$

Conjugate of Complex Numbers

9. If $z = x + iy$ then its conjugate is: **11301087**

(a) $x + iy$ (b) $-x - iy$

(c) $-x+iy$ (d) $x-iy$

10. z is called self-conjugate if: 11301088

(a) $z \neq \bar{z}$ (b) $z = i$

(c) $z = \bar{z}$ (d) $z = -\bar{z}$

11. $z - \bar{z}$ is: 11301089

(a) Real number (b) Imaginary number

(c) 0 (d) 1

12. The product of two conjugate complex numbers is: 11301090

(a) Always ≥ 0

(b) Always ≤ 0

(c) either ≥ 0 or ≤ 0

(d) Always $= 0$

13. $z + \bar{z}$ is: 11301091

(a) Real number (b) Imaginary number

(c) $2\bar{z}$ (d) None

14. If a complex number $x+iy$ lies in 1st quadrant, then its conjugate lies in … quadrant: 11301092

(a) 1st (b) 2nd

(c) 3rd (d) 4th

15. If a complex number $x+iy$ lies in 2nd quadrant, then its conjugate lies in … quadrant: 11301093

(a) 1st (b) 2nd

(c) 3rd (d) 4th

16. $z \cdot \bar{z}$ is: 11301094

(a) $|z|$ (b) $-|z|$

(c) $|z|^2$ (d) $-|z|^2$

17. If z_1 and z_2 are any two complex numbers then: 11301095

(a) $\overline{z_1 \pm z_2} = \bar{z}_1 \pm \bar{z}_2$

(b) $\overline{z_1 \cdot z_2} = \bar{z}_1 \cdot \bar{z}_2$

(c) $\overline{\left(\frac{z_1}{z_2}\right)} = \frac{\bar{z}_1}{\bar{z}_2}$

(d) all of these

Operations on Complex Number

18. $(a+ib)+(c+id)=\ldots$ 11301096

(a) $(a+b)+i(c+d)$

(b) $(a-c)+i(b-d)$

(c) $(a+d)+i(b+c)$

(d) $(a+c)+i(b+d)$

19. $(a+ib)-(c+id)=\ldots$ 11301097

(a) $(a+b)+i(c+d)$

(b) $(a-c)+i(b-d)$

(c) $(a+d)+i(b+c)$

(d) $(a+c)+i(b+d)$

20. $(a+ib)(c+id)=\ldots$ 11301098

(a) $(ac-bd)+i(ad+bc)$

(b) $(ac+bd)+i(ad-bc)$

(c) $(ac-bd)+i(ad-bc)$

(d) $(ac+bd)+i(ad+bc)$

21. If k is any real number, then $k(a+ib)=\ldots$ 11301099

(a) $ka+ib$ (b) $ka+ikb$

(c) $a+ikb$ (d) $a+ib$

Complex Numbers as Ordered Pairs of Real Numbers

22. $(a,b)+(c,d)=\ldots$ 11301100

(a) $(a+b,c+d)$ (b) $(a-c,b-d)$

(c) $(a+d,b+c)$ (d) $(a+c,b+d)$

23. $(a,b)-(c,d)=\ldots$ 11301101

(a) $(a+b,c+d)$ (b) $(a-c,b-d)$

(c) $(a+d,b+c)$ (d) $(a+c,b+d)$

24. $(a,b)(c,d)=\ldots$ 11301102

(a) $(ac-bd,ad+bc)$

(b) $(ac+bd,ad-ac)$

(c) $(ac-bd, ad-bc)$

(d) $(ac+bd, ad+bc)$

25. $(9,8)(5,-6)=...$ **11301103**

(a) $(-93,-14)$ (b) $(-93,14)$

(c) $(93,-14)$ (d) $(94,3)$

26. If k is any real number, then $k(a,b)=...$ **11301104**

(a) (ka,b) (b) (ka,kb)

(c) (a,kb) (d) (a,b)

Properties of the Fundamental Operations on Complex Numbers

27. Multiplicative inverse and conjugate of i is: **11301105**

(a) i (b) $-i$

(c) 1 (d) -1

28. Additive inverse of (a,b) is: **11301106**

(a) $(a,-b)$ (b) (a,b)

(c) $(-a,b)$ (d) $(-a,-b)$

29. Multiplicative inverse of (a,b) is: **11301107**

(a) $\left(\frac{a}{a^2+b^2}, \frac{b}{a^2+b^2}\right)$

(b) $\left(\frac{a}{a^2+b^2}, \frac{-b}{a^2+b^2}\right)$

(c) $\left(-\frac{a}{a^2+b^2}, \frac{b}{a^2+b^2}\right)$

(d) $\left(-\frac{a}{a^2+b^2}, -\frac{b}{a^2+b^2}\right)$

30. Additive identity in C is: **11301108**

(a) $(1,0)$ (b) $(0,0)$

(c) $(0,1)$ (d) $(1,1)$

31. Multiplicative identity in C is: **11301109**

(a) $(1,0)$ (b) $(0,0)$

(c) $(0,1)$ (d) $(1,1)$

Argand Diagram

32. The figure representing one or more complex numbers on the complex plane is called… **11301110**

(a) Venn diagram

(b) Real plane

(c) Argand diagram

(d) Imaginary plane

33. In an Argand diagram x-axis is called… **11301111**

(a) Complex axis (b) Imaginary axis

(c) Real axis (d) Axis of rotation

34. In an Argand diagram y-axis is called… **11301112**

(a) Complex axis (b) imaginary axis

(c) real axis (d) axis of rotation

35. In an Argand diagram the points on the x-axis represent … numbers. **11301113**

(a) real (b) imaginary

(c) complex (d) none of these

36. In an Argand diagram the points on the y-axis represent … numbers. **11301114**

(a) real (b) imaginary

(c) complex (d) none of these

Modulus of a complex number

37. The modulus of a complex number is the distance from: **11301115**

(a) x-axis (b) y-axis

(c) (x,y) (d) origin

38. If $z=x+iy$ then $|z|$ is: **11301116**

(a) $\sqrt{x^2-y^2}$ (b) $\sqrt{x^2+y^2}$

(c) x^2-y^2 (d) x^2+y^2

39. Modulus of complex number $3-4i$ is: **11301117**

(a) 4 (b) 5

(c) -5 (d) $3-4i$

40. If z_1 and z_2 are any two complex numbers then: 11301118

(a) $|z_1 \pm z_2| = |z_1| \pm |z_2|$

(b) $|z_1 z_2| = |z_1||z_2|$

(c) $\left|\frac{z_1}{z_2}\right| = \frac{|z_1|}{|z_2|}$

(d) all of these

41. Triangle inequality is: 11301119

(a) $|z_1 + z_2| < |z_1| + |z_2|$

(b) $|z_1 + z_2| \le |z_1| + |z_2|$

(c) $|z_1 + z_2| > |z_1| + |z_2|$

(d) $|z_1 + z_2| \ge |z_1| + |z_2|$

Powers of i

42. If n is an even integer, then $i^n = ...$ 11301120

(a) i (b) $-i$

(c) ± 1 (d) $\pm i$

43. If n is an odd integer, then $i^n = ...$ 11301121

(a) i (b) $-i$

(c) ± 1 (d) $\pm i$

44. If n is an integral multiple of 4, then $i^n = ...$ 11301122

(a) i (b) $-i$

(c) 1 (d) -1

45. $(0,1)^4 = ...$ 11301123

(a) i (b) $-i$

(c) 1 (d) -1

46. $i^{-1} = ?$ 11301124

(a) i (b) $-i$

(c) $\bar{i}$ (d) both (b) and (c)

47. $(-1)^{\frac{21}{2}} = ?$ 11301125

(a) -1 (b) 1

(c) i (d) $-i$

48. $(0,1)(0,1) = ?$ 11301126

(a) $(0,1)$ (b) $(0,-1)$

(c) $(1,0)$ (d) $(-1,0)$

49. $i^{14} + i^{15} + i^{16} + i^{17} = ...$ 11301127

(a) 1 (b) -1

(c) 0 (d) $1+i$

Equality of Two Complex Numbers

50. $a + ib = c + id \Leftrightarrow ...$ 11301128

(a) $a = c$ and $b = d$ (b) $a = b$ and $c = d$

(c) $a = d$ and $b = c$ (d) $a = -c$ and $b = -d$

51. If $x - y + 2xyi = 7 - 24i$, then... 11301129

(a) $x = 3, y = -4$ (b) $x = -3, y = -4$

(c) $x = -3, y = 4$ (d) $x = 3, y = 4$

52. If $2x + 3yi = 1 + 4i^2$, then ... 11301130

(a) $x = \frac{3}{2}, y = 0$ (b) $x = -\frac{3}{2}, y = 0$

(c) $x = 0, y = -\frac{3}{2}$ (d) $x = 0, y = \frac{3}{2}$

Square Root of a Complex Number

53. The square root of a complex number is another complex number that, when..., gives the original complex number. 11301131

(a) added (b) subtracted

(c) squared (d) all of these

54. $\sqrt{z} = ...$ 11301132

(a) $\pm\left(\sqrt{\frac{|z|+x}{2}} + i\frac{y}{|y|}\sqrt{\frac{|z|-x}{2}}\right)$

(b) $\pm\left(\sqrt{\frac{|z|-x}{2}} + i\frac{y}{|y|}\sqrt{\frac{|z|+x}{2}}\right)$

(c) $\pm\left(\sqrt{\frac{|z|+x}{2}} - i\frac{y}{|y|}\sqrt{\frac{|z|-x}{2}}\right)$

(d) None of these

55. $\sqrt{5+12i}=...$ **11301133**

(a) $\pm(-3+2i)$ (b) $\pm(-3-2i)$

(c) $\pm(3-2i)$ (d) $\pm(3+2i)$

56. Real part of $\sqrt{x+iy}=...$ **11301134**

(a) $\pm\sqrt{\frac{|z|-x}{2}}$ (b) $\pm\sqrt{\frac{|z|+x}{2}}$

(c) $\pm\frac{y}{|y|}\sqrt{\frac{|z|-x}{2}}$ (d) $\pm\frac{y}{|y|}\sqrt{\frac{|z|+x}{2}}$

57. Real part of $\sqrt{5+12i}=...$ **11301135**

(a) ±4 (b) ±3

(c) ±5 (d) ±12

58. Imaginary part of $\sqrt{x+iy}=...$ **11301136**

(a) $\pm\sqrt{\frac{|z|-x}{2}}$ (b) $\pm\sqrt{\frac{|z|+x}{2}}$

(c) $\pm\frac{y}{|y|}\sqrt{\frac{|z|-x}{2}}$ (d) $\pm\frac{y}{|y|}\sqrt{\frac{|z|+x}{2}}$

59. Imaginary part of $\sqrt{5+12i}=...$ **11301137**

(a) ±5 (b) ±12

(c) ±3 (d) ±2

Complex Polynomials as a Product of Linear Factors

60. Factorization of a^2+b^2 **in complex number system is …** **11301138**

(a) $(a+ib)(a-ib)$

(b) $(a+b)(a-b)$

(c) $(a+ib)(a-b)$

(d) $(a+b)(a-ib)$

61. $z^2-2iz-1=...$ **11301139**

(a) $(z+i)(z+i)$ (b) $(z-i)(z+i)$

(c) $(z-i)(z-i)$ (d) $(z+i)(z-i)$

62. $z^4-16=...$ **11301140**

(a) $(z+4)(z+4)$

(b) $(z-2i)(z+2i)$

(c) $(z+4i)(z-4i)$

(d) $(z+2i)(z-2i)(z+2)(z-2)$

The three cube roots of unity

63. The sum and the product of three cube roots of unity are respectively. **11301141**

(a) 0 & 1 (b) 1 & –1

(c) 1 & 0 (d) –1 & 1

64. The three cube roots of 27 are … **11301142**

(a) $-3,-3\omega,-3\omega^2$ (b) $3,3\omega,3\omega^2$

(c) $-1,-\omega,-\omega^2$ (d) $1,\omega,\omega^2$

65. If n **is an integral multiple of 3, then** $\omega^n=$**…** **11301143**

(a) i (b) $-i$

(c) 1 (d) –1

66. The three cube roots of –27 are … **11301144**

(a) $-3,-3\omega,-3\omega^2$ (b) $3,3\omega,3\omega^2$

(c) $-1,-\omega,-\omega^2$ (d) $1,\omega,\omega^2$

67. The three cube roots of unity are … **11301145**

(a) $1,\frac{-1+i\sqrt{3}}{2},\frac{-1-i\sqrt{3}}{2}$

(b) $1,\frac{1+i\sqrt{3}}{2},\frac{1-i\sqrt{3}}{2}$

(c) $-1,\frac{-1+i\sqrt{3}}{2},\frac{-1-i\sqrt{3}}{2}$

(d) $-1,\frac{1+i\sqrt{3}}{2},\frac{1-i\sqrt{3}}{2}$

68. The product of the three cube roots of a number is equal to … **11301146**

(a) reciprocal of the same number

(b) square of the same number

(c) the same number

(d) additive inverse of the same number

69. The complex cube roots of unity are … of each other. **11301147**

(a) square (b) conjugate
(c) inverse (d) all of these

Four fourth roots of unity

70. The four fourth roots of unity are. 11301148

(a) $\pm 1, \pm\omega$ (b) $\pm 1, \pm i$
(c) $\pm 2, \pm 2i$ (d) $\pm 2, \pm 2\omega$

Properties of four Fourth Roots of Unity

71. The sum of the four 4th roots of unity is equal to … 11301149

(a) 1 (b) –1
(c) 0 (d) none of these

72. The product of the four fourth root of a number, is equal to … 11301150

(a) reciprocal of the same number
(b) square of the same number
(c) the same number
(d) additive inverse of the same

73. The product of the four fourth roots of 64 is equal to… 11301151

(a) 64 (b) –64
(c) 0 (d) none of these

74. The sum of the four fourth roots of 64 is equal to… 11301152

(a) 64 (b) –64
(c) 0 (d) none of these

Polar coordinate system

75. In polar coordinate system the location of a point P can be described by the polar coordinate…, where r and θ are real numbers. 11301153

(a) (x, y) (b) (y, x)
(c) (r, θ) (d) (θ, r)

76. In polar coordinate system r is typically … 11301154

(a) $r \le 0$ (b) $r \ge 0$
(c) $r < 0$ (d) $r = 0$

77. When the angle θ is the measure of an angle in standard position whose terminal side lies along the line connecting the origin to the point P, measured from the polar axis… 11301155

(a) $r \le 0$ (b) $r > 0$
(c) $r < 0$ (d) $r = 0$

78. When the angle θ is the measure of an angle is standard position whose terminal side lies along the line connecting the origin to the point Q but the point Q is located $|r|$ units in the opposite direction from the polar axis… 11301156

(a) $r \le 0$ (b) $r > 0$
(c) $r < 0$ (d) $r = 0$

The Polar Form of a Complex Number

79. Polar form of z is: 11301157

(a) $r(\cos\theta - i\sin\theta)$
(b) $r(\cos\theta + i\sin\theta)$
(c) $r(\sin\theta - i\cos\theta)$
(d) $r(\sin\theta + i\cos\theta)$

80. Polar form of $1 + i\sqrt{3}$ is: 11301158

(a) $2(\cos 60° - i\sin 60°)$
(b) $2(\cos 60° + i\sin 60°)$
(c) $(2\cos 30° - i\sin 30°)$
(d) $2(\cos 30° + i\sin 30°)$

81. Polar form of $\sqrt{3} + i$ is: 11301159

(a) $2\left(\cos\frac{\pi}{6} + i\sin\frac{\pi}{6}\right)$
(b) $2\left(\cos\frac{\pi}{6} - \sin\frac{\pi}{6}\right)$
(c) $2\left(\cos\frac{\pi}{3} + i\sin\frac{\pi}{3}\right)$
(d) $2\left(\cos\frac{\pi}{3} - i\sin\frac{\pi}{3}\right)$

82. –1 in polar form can be written as: 11301160

(a) $\cos\pi + i\sin\pi$ (b) $\cos\frac{\pi}{2} + i\sin\frac{\pi}{2}$

(c) $\sin\pi + i\cos\pi$ (d) $\sin\frac{\pi}{2} + i\cos\frac{\pi}{2}$

Operations on Complex Numbers in Polar Form

83. If $z_1 = r_1[\cos\theta_1 + i\sin\theta_1]$ **and** $z_2 = r_2[\cos\theta_2 + i\sin\theta_2]$**, then** $Arg(z_1 \cdot z_2) = ...$ 11301161

(a) $\theta_1 + \theta_2$ (b) $\theta_1 - \theta_2$

(c) $\theta_2 - \theta_1$ (d) $\theta_1 \cdot \theta_2$

84. If $z_1 = 9\left(\cos\frac{5\pi}{4} + i\sin\frac{5\pi}{4}\right)$ **and** $z_2 = 5\left(\cos\frac{\pi}{3} + i\sin\frac{\pi}{3}\right)$ **then** $Arg(z_1 z_2) = ...$ 11301162

(a) $\frac{19\pi}{12}$ (b) $\frac{17\pi}{12}$

(c) $\frac{19\pi}{4}$ (d) $\frac{17\pi}{12}$

85. If $z_1 = r_1[\cos\theta_1 + i\sin\theta_1]$ **and** $z_2 = r_2[\cos\theta_2 + i\sin\theta_2]$**, then Arg** $\left(\frac{z_1}{z_2}\right) = ...$ 11301163

(a) $\theta_1 + \theta_2$ (b) $\frac{\theta_1}{\theta_2}$

(c) $\theta_1 - \theta_2$ (d) $\theta_1 \cdot \theta_2$

86. If $z_1 = 9\left(\cos\frac{5\pi}{4} + i\sin\frac{5\pi}{4}\right)$ **and** $z_2 = 5\left(\cos\frac{\pi}{3} + i\sin\frac{\pi}{3}\right)$ **then Arg** $\left(\frac{z_1}{z_2}\right) = ...$ 11301164

(a) $\frac{19\pi}{12}$ (b) $\frac{17\pi}{12}$

(c) $\frac{11\pi}{12}$ (d) $\frac{9\pi}{12}$

87. If $|z| = 7, Arg(z) = \frac{23\pi}{12}$**, then** $z = ...$ 11301165

(a) $7\left(\cos\frac{23\pi}{12} + i\sin\frac{23\pi}{12}\right)$

(b) $7\left(\cos\frac{23\pi}{12} - i\sin\frac{23\pi}{12}\right)$

(c) $7\left(-\cos\frac{23\pi}{12} + i\sin\frac{23\pi}{12}\right)$

(d) $7\left(-\cos\frac{23\pi}{12} - i\sin\frac{23\pi}{12}\right)$

88. If $|z| = 11, Arg(z) = -\frac{11\pi}{12}$**, then** $z = ...$ 11301166

(a) $11\left[\cos\left(-\frac{11\pi}{12}\right) + i\sin\left(-\frac{11\pi}{12}\right)\right]$

(b) $11\left[\cos\left(\frac{11\pi}{12}\right) - i\sin\left(\frac{11\pi}{12}\right)\right]$

(c) $11\left[-\cos\left(\frac{11\pi}{12}\right) - i\sin\left(\frac{11\pi}{12}\right)\right]$

(d) Both (a) and (b)

89. $2\cos(-33°) + 2i\sin(-33°) = ...$ 11301167

(a) $2\{\cos(33°) - i\sin(33°)\}$

(b) $2\{\cos(-33°) + i\sin(-33°)\}$

(c) $-2\{\cos(33°) - i\sin(33°)\}$

(d) Both (a) and (b)

90. If $z_1 = 6(\cos 150° + i\sin 150°)$ **and** $z_2 = 3(\cos 30° + i\sin 30°)$**, then** $\frac{z_1}{z_2} = ...$ 11301168

(a) $\frac{1}{2}[\cos 120° + i\sin 120°]$

(b) $2[\cos 180° + i\sin 180°]$

(c) $2[\cos 120° + i\sin 120°]$

(d) $\frac{1}{2}[\cos 180° + i\sin 180°]$

ANSWERS KEY

1	a	11	b	21	b	31	a	41	b	51	a	61	c	71	c	81	a
2	b	12	a	22	d	32	c	42	c	52	b	62	d	72	d	82	a
3	c	13	a	23	b	33	c	43	d	53	c	63	a	73	b	83	a
4	a	14	d	24	a	34	b	44	c	54	a	64	b	74	c	84	a
5	d	15	c	25	c	35	a	45	c	55	d	65	c	75	c	85	c
6	d	16	c	26	b	36	b	46	d	56	b	66	a	76	b	86	c
7	a	17	d	27	b	37	d	47	d	57	b	67	a	77	b	87	a
8	a	18	d	28	d	38	b	48	d	58	c	68	c	78	c	88	d
9	d	19	b	29	b	39	b	49	c	59	d	69	d	79	b	89	d
10	c	20	a	30	b	40	d	50	a	60	a	70	b	80	b	90	c

Additional Short Questions

Complex Numbers

1. Define complex number. **11301169**

2. Separate $\frac{2-7i}{4-5i}$ into real and imaginary parts (write as a simple complex number). **11301170**

3. Separate $\frac{(-2+3i)^2}{1-i}$ into real and imaginary parts (write as a simple complex number). **11301171**

4. Separate $\frac{i}{1-i}$ into real and imaginary parts (write as a simple complex number). **11301172**

5. For $z \in C$, show that $z+\bar{z}=2\operatorname{Re}(z)$. **11301173**

6. For $z \in C$, show that $z-\bar{z}=2i\operatorname{Im}(z)$. **11301174**

7. If $z_1=2-3i$ and $z_2=1+\alpha i$, find the value of α such that $\operatorname{Im}(z_1z_2)=7$. **11301175**

8. Define the conjugate of a complex number. **11301176**

9. If $z_1=2+i, z_2=3+2i, z_3=1+3i$ then express $\frac{\bar{z}_1\bar{z}_3}{z_2}$ in form of $a+ib$. **11301177**

Operations on Complex Numbers

10. Show that $\forall z_1, z_2 \in C$, $\overline{z_1+z_2}=\bar{z}_1+\bar{z}_2$. **11301178**

11. Find the sum of the complex numbers $7+9i$ and $3-5i$. **11301179**

12. Find the difference of the complex numbers $7+9i$ and $3-5i$. **11301180**

13. Find the product of the complex numbers $7+9i$ and $3-5i$. **11301181**

14. Find the product of the complex numbers $(8,9)$ and $(5,6)$. **11301182**

15. If $z_1=(4,2)$ and $z_2=(3,1)$, then find $\frac{z_1}{z_2}$. **11301183**

16. Find the multiplicative inverse of $(4,7)$. **11301184**

17. Find the multiplicative inverse of $(\sqrt{2},\sqrt{5})$. **11301185**

18. Find the multiplicative invers of $(-1,0)$. **11301186**

19. Define Argand Diagram. **11301187**

20. Define modulus of a complex number. **11301188**

21. If $z=\frac{(1+2i)^2}{2+i}$, then evaluate $|\bar{z}|$. **11301189**

22. For $z \in C$, show that $|z|=\sqrt{z\cdot\bar{z}}$. **11301190**

23. If $z_1 = 2+7i$ and $z_2 = 5+3i$, then evaluate $|2z_1 - 4z_2|$. **11301191**

24. If $z_1 = 2-7i$, then evaluate $|3z_1 + 2\overline{z_1}|$. **11301192**

25. If $z_2 = 5+3i$, then evaluate $|-7z_2 + 2\overline{z_2}|$. **11301193**

26. If $z_1 = 2+7i$ and $z_2 = 5+3i$, then evaluate $|(z_1+z_2)^3|$. **11301194**

27. Show that: $i^n + i^{n+1} + i^{n+2} + i^{n+3} = 0$ for all $n \in N$. **11301195**

Equality of Two Complex Number

28. Define equality of two complex numbers. **11301196**

29. If $z_1 = 13+24i$ and $z_2 = x+iy$, find the values of x and y such that $z_1 - z_2 = -27+15i$. **11301197**

30. Find the values of x and y such that $x+iy = \dfrac{-2-5i}{(1+i)^3}$. **11301198**

Square Root of Complex Number

31. Define square root of a complex number. **11301199**

32. Find the square root of a complex number $5-12i$. **11301200**

33. Find the square root of $-7+24i$. **11301201**

34. Find the square root of $8+6i$. **11301202**

Complex Polynomials as a product of linear factors

35. Define zeros of a polynomial function. **11301203**

36. Factorize the polynomial $P(z) = z^2 + (i+3)z + 3i$. **11301204**

37. Factorize the polynomial $P(z) = z^2 - iz + 12$. **11301205**

38. Factorize the polynomial $P(z) = z^3 + (1-i)z^2 - iz$ **11301206**

39. State the rational root theorem. **11301207**

40. Factorize $a^2 + b^2$. **11301208**

41. Factorize $25a^2 + 16b^2$. **11301209**

42. Factorize $5x^2 + 5y^2$. **11301210**

43. Factorize the polynomial $z^3 - 8$ into its linear factors. **11301211**

44. Factorize the polynomial $z^3 + 2z^2 + 16z + 32$ into its linear factors. **11301212**

45. Factorize the polynomial $z^4 - 1$ into its linear factors. **11301213**

Solution of Quadratic Equation by Completing the square

46. Solve the equation $z^2 - 6z = -25$, by completing square method and hence express it as a product of its linear factors. **11301214**

47. Solve the equation $z^4 - 16 = 0$. **11301215**

48. Solve the equations $z^3 - z^2 + z - 1 = 0$. **11301216**

Properties of Cube Roots of Unity

49. Find the three cube roots of unity. **11301217**

50. Prove that the sum of the three cube roots of unity is zero. **11301218**

51. Prove that the product of the three cube roots of unity is 1. **11301219**

52. Prove that the complex cube roots of unity are square of each other. **11301220**

53. Find the three cube roots of -1. **11301221**

54. Find the four fourth roots of unity. **11301222**

55. Find the four fourth roots of 16. Also show that their sum is zero. **11301223**

56. If $1, \omega, \omega^2$ are the cube roots of unity, show that $\omega^{3n} = 1$ where n is a multiple of 3. **11301224**

57. Evaluate: $\left(\dfrac{-1+\sqrt{-3}}{2}\right)^9 + \left(\dfrac{-1-\sqrt{-3}}{2}\right)^9$ **11301225**

58. Evaluate $\sum_{k=1}^{4}\omega^{2k}$ where ω is an imaginary cube root of unity. **11301226**

Polar form of a complex number

59. Define the polar form of a complex number. **11301227**

60. Express the complex numbers $\sqrt{2}+i$ in polar form: **11301228**

61. Express the complex numbers $\frac{1+i}{1-i}$ in polar form. **11301229**

62. Convert the complex number $z=4\left(\cos\frac{\pi}{3}+i\sin\frac{\pi}{3}\right)$ in the rectangular form $x+iy$. **11301230**

63. Convert the complex number z where $|z|=5, Arz(z)=\frac{\pi}{2}$ in the rectangular form $x+iy$. **11301231**

64. Find the product of $5\left(\cos\frac{\pi}{6}+i\sin\frac{\pi}{6}\right)$ and $4\left(\cos\frac{\pi}{3}+i\sin\frac{\pi}{3}\right)$. **11301232**

65. If $z_1=9\left(\cos\frac{\pi}{3}+i\sin\frac{\pi}{3}\right)$ and $z_2=5\left(\cos\frac{\pi}{6}+i\sin\frac{\pi}{6}\right)$ then find $\frac{z_1}{z_2}$. **11301233**

66. Find the modulus and argument of $z=2+2i$. **11301234**

ANSWERS KEY

1. A number of the form $x+iy, x, y\in R$ and $i=\sqrt{-1}$, is called a complex number.

2. Real part $=\frac{43}{41}$, Imaginary part $=-\frac{18}{41}$

3. Real part $=\frac{7}{2}$, Imaginary part $=-\frac{17}{2}$

4. Real part $=-\frac{1}{2}$, Imaginary part $=\frac{1}{2}$

7. $\alpha=5$

8. For a complex number $z=x+iy$, the complex number $\bar{z}=x-iy$, is called conjugate of the complex number z.

9. $-\frac{17}{13}-\frac{19}{13}i$

11. $10+4i$

12. $4+14i$

13. $66-8i$

14. $(-14,93)$

15. $\frac{7}{5}+\frac{1}{5}i$

16. $\left(\frac{4}{65},\frac{-7}{65}\right)$

17. $\left(\frac{\sqrt{2}}{7},-\frac{\sqrt{5}}{7}\right)$

18. $(-1,0)$

19. The figure representing one or more complex numbers on the complex plane is called an Argand diagram.

20. For a complex number $z=x+iy$, the real number $\sqrt{x^2+y^2}$, is called the modulus of the complex number z denoted by $|z|$ i.e. $|z|=\sqrt{x^2+y^2}$.

21. $\sqrt{5}$

23. $2\sqrt{65}$

24. $\sqrt{149}$

25. $\sqrt{1354}$

26. $149\sqrt{149}$

28. The two complex numbers $z_1=a+ib$ and $z_2=c+id$ are said to be equal iff their real and imaginary parts are equal i.e. $a+ib=c+id \Leftrightarrow a=c$ and $b=d$

29. $x=40$ and $y=9$

30. $x=-\frac{3}{4}, y=\frac{7}{4}$

31. The square root of a complex number is another complex number that, when squared, gives the original complex number.

32. $\pm(3-2i)$

33. $\pm(3+4i)$

34. $\pm(3+i)$

35. If $P(z)$ is a polynomial function, the values of z that satisfy $P(z)=0$ are called zeros of the polynomial function $P(z)$ and roots of the polynomial equation $P(z)=0$

36. $(z+i)(z+3)$

37. $(z-4i)(z+3i)$

38. $z(z+1)(z-i)$

39. If a polynomial $P(z)=a_n z^n + a_{n-1}z^{n-1} + a_{n-2}z^{n-2} + ... + a_1 z + a_0$ has integer coefficients, then every rational root $\frac{p}{q}$ (in the simplest form) satisfies:

(i) p is a factor of the constant term a_0.

(ii) q is a factor of the leading coefficient a_n.

40. $(a+ib)(a-ib)$

41. $(5a+i4b)(5a-i4b)$

42. $5(x+iy)(x-iy)$

43. $(z-2)(z+1+i\sqrt{3})(z+1-i\sqrt{3})$

44. $(z+2)(z+4i)(z-4i)$

45. $(z+i)(z-i)(z+1)(z-1)$

46. $(z-3-4i)(z-3+4i)$

47. $z=\pm 2$ or $z=\pm 2i$

48. $z=1$ or $z=\pm i$

49. $1, \omega, \omega^2$

53. $-1, -\omega, -\omega^2$

54. $1, -1, i, -i$

55. $2, -2, 2i, -2i$

57. 2

58. ω^2

59. $z=r(\cos\theta + i\sin\theta)$, where $r=|z|=\sqrt{x^2+y^2}, \theta=\tan^{-1}\left(\frac{y}{x}\right)$

60. $\sqrt{3}\left(\cos\frac{\pi}{4}+i\sin\frac{\pi}{4}\right)$

61. $1\left(\cos\frac{\pi}{2}+i\sin\frac{\pi}{2}\right)$

62. $2+2\sqrt{3}i$

63. $5i$

64. $20i$

65. $\frac{9\sqrt{3}}{10}+\frac{9i}{10}$

66. $2\sqrt{2}, \frac{\pi}{4}$